SUN2000-(196KTL-H0, 200KTL-H2, 215KTL-H0)

User Manual

Issue	19
Date	2024-06-20

HUAWEI TECHNOLOGIES CO., LTD.

Copyright © Huawei Technologies Co., Ltd. 2024. All rights reserved.

No part of this document may be reproduced or transmitted in any form or by any means without prior written consent of Huawei Technologies Co., Ltd.

Trademarks and Permissions

HUAWEI and other Huawei trademarks are trademarks of Huawei Technologies Co., Ltd.
All other trademarks and trade names mentioned in this document are the property of their respective holders.

Notice

The purchased products, services and features are stipulated by the contract made between Huawei and the customer. All or part of the products, services and features described in this document may not be within the purchase scope or the usage scope. Unless otherwise specified in the contract, all statements, information, and recommendations in this document are provided "AS IS" without warranties, guarantees or representations of any kind, either express or implied.

The information in this document is subject to change without notice. Every effort has been made in the preparation of this document to ensure accuracy of the contents, but all statements, information, and recommendations in this document do not constitute a warranty of any kind, express or implied.

Huawei Technologies Co., Ltd.

Address: Huawei Industrial Base
Bantian, Longgang
Shenzhen 518129
People's Republic of China

Website: https://e.huawei.com

About This Document

Purpose

This document describes the installation, electrical connections, commissioning, maintenance, and troubleshooting of the SUN2000-196KTL-H0, SUN2000-200KTL-H2, and SUN2000-215KTL-H0 (also referred to as SUN2000). Before installing and operating the inverter, ensure that you are familiar with the features, functions, and safety precautions provided in this document.

Intended Audience

This document is intended for photovoltaic (PV) plant operators and qualified electricians.

Symbol Conventions

The symbols that may be found in this document are defined as follows.

Symbol	Description
DANGER	Indicates a hazard with a high level of risk which, if not avoided, will result in death or serious injury.
WARNING	Indicates a hazard with a medium level of risk which, if not avoided, could result in death or serious injury.
CAUTION	Indicates a hazard with a low level of risk which, if not avoided, could result in minor or moderate injury.
NOTICE	Indicates a potentially hazardous situation which, if not avoided, could result in equipment damage, data loss, performance deterioration, or unanticipated results. NOTICE is used to address practices not related to personal injury.
NOTE	Supplements the important information in the main text. NOTE is used to address information not related to personal injury, equipment damage, and environment deterioration.

Copyright © Huawei Technologies Co., Ltd.

Change History

Changes between document issues are cumulative. The latest document issue contains all the changes made in earlier issues.

Issue 19 (2024-06-20)

Updated **5.7 Connecting DC Input Power Cables**.

Issue 18 (2024-03-20)

Added **8.7 Locating Insulation Resistance Faults**.

Updated **D Grid Codes**.

Issue 17 (2024-01-30)

Updated **2.1 Product Overview**.

Updated **2.3.1 Enclosure Labels**.

Updated **3 Storage Requirements**.

Updated **4.3.1 Environment Requirements**.

Updated **4.3.2 Clearance Requirements**.

Updated **6.1 Checking Before Power-On**.

Updated **7.2 Upgrading the Inverter**.

Issue 16 (2023-12-20)

Updated **4.3.1 Environment Requirements**.

Updated **5.1 Precautions**.

Updated **5.6 Connecting the AC Output Power Cable**.

Updated **5.7 Connecting DC Input Power Cables**.

Updated **8.5 Alarm Reference**.

Updated **F Contact Information**.

Added **G Digital Power Customer Service**.

Issue 15 (2023-08-31)

Updated **2.5 Smart I-V Curve Diagnosis**.

Updated **5.7 Connecting DC Input Power Cables**. Changed "During DC input power cabling, leave at least 50 mm of slack." to "During DC input power cabling, leave at least 150 mm of slack."

Updated **A Securing Y-Branch Connectors**. Changed "During DC input power cabling, leave at least 50 mm of slack." in the figure to "During DC input power cabling, leave at least 150 mm of slack."

 Copyright © Huawei Technologies Co., Ltd.

Issue 14 (2023-05-25)

Updated **2.1 Product Overview**.

Issue 13 (2023-03-30)

Updated **2.1 Product Overview**.

Issue 12 (2023-02-23)

Updated **D Grid Codes**.

Issue 11 (2022-11-30)

Updated **1 Safety Information**.

Updated **2.1 Product Overview**.

Updated **4.2 Preparing Tools**.

Updated **4.5 Installing the Inverter**.

Updated **5.6 Connecting the AC Output Power Cable**.

Updated **7.1.2 Downloading and Installing the App**.

Deleted the content about operations related to a USB flash drive.

Updated **8.5 Alarm Reference**.

Updated **D Grid Codes**.

Added **E Resetting Password**.

Added **F Contact Information**.

Issue 10 (2022-05-10)

Updated **10 Technical Data**.

Issue 09 (2022-02-20)

Updated **2.2 Appearance**.

Updated **2.3.1 Enclosure Labels**.

Updated **4.3.1 Environment Requirements**.

Updated **6.2 System Power-On**.

Updated **8.3 Routine Maintenance**.

Updated **8.6 Resetting and Turning On the DC Switch**.

Issue 08 (2021-09-30)

Updated **2.2 Appearance**.

Updated **2.3.1 Enclosure Labels**.

 Copyright © Huawei Technologies Co., Ltd.

Updated **5.3 Opening the Maintenance Compartment Door**.

Updated **5.4 (Optional) Replacing the Crimping Module**.

Updated **5.5 (Optional) Installing the Power Cable of the Tracking System**.

Updated **5.6 Connecting the AC Output Power Cable**.

Updated **5.9 Closing the Maintenance Compartment Door**.

Updated **6.2 System Power-On**.

Updated **8.2 Power-Off for Troubleshooting**.

Added **8.6 Resetting and Turning On the DC Switch**.

Issue 07 (2021-07-08)

Updated **6.2 System Power-On**.

Updated **7.1.3 Logging In to the App**.

Updated **8.5 Alarm Reference**.

Issue 06 (2021-05-21)

Updated **5.7 Connecting DC Input Power Cables**.

Issue 05 (2021-04-26)

Updated **5.7 Connecting DC Input Power Cables**.

Updated **A Securing Y-Branch Connectors**.

Issue 04 (2021-03-15)

Updated **4.2 Preparing Tools**.

Updated **5.7 Connecting DC Input Power Cables**.

Updated **8.5 Alarm Reference**.

Issue 03 (2020-12-21)

Updated **5.6 Connecting the AC Output Power Cable**.

Issue 02 (2020-10-30)

Added descriptions about the SUN2000-200KTL-H2 and SUN2000-215KTL-H0.

Issue 01 (2020-05-15)

This issue is used for first office application (FOA).

 Copyright © Huawei Technologies Co., Ltd.

Contents

About This Document ii

1 Safety Information 1

1.1 Personal Safety 2

1.2 Electrical Safety 4

1.3 Environment Requirements 7

1.4 Mechanical Safety 9

2 Overview 13

2.1 Product Overview 13

2.2 Appearance 15

2.3 Label Description 19

2.3.1 Enclosure Labels 19

2.3.2 Product Nameplate 20

2.4 Working Principles 21

2.4.1 Circuit Diagram 21

2.4.2 Working Modes 22

2.5 Smart I-V Curve Diagnosis 24

3 Storage Requirements 25

4 Installation 27

4.1 Checking Before Installation 27

4.2 Preparing Tools 27

4.3 Determining the Installation Position 29

4.3.1 Environment Requirements 29

4.3.2 Clearance Requirements 31

4.4 Installing the Mounting Bracket 34

4.4.1 Support-mounted Installation 34

4.4.2 Wall-mounted Installation 35

4.5 Installing the Inverter 36

5 Electrical Connections 40

5.1 Precautions 40

5.2 Crimping an OT or DT Terminal 41

5.3 Opening the Maintenance Compartment Door 44

 Copyright © Huawei Technologies Co., Ltd.

5.4 (Optional) Replacing the Crimping Module....45
5.5 (Optional) Installing the Power Cable of the Tracking System....46
5.6 Connecting the AC Output Power Cable....47
5.7 Connecting DC Input Power Cables....53
5.8 Installing the Communications Cable....59
5.9 Closing the Maintenance Compartment Door....62

6 System Commissioning....64
6.1 Checking Before Power-On....64
6.2 System Power-On....65

7 Man-Machine Interactions....67
7.1 Operations with the App....67
7.1.1 App Introduction....67
7.1.2 Downloading and Installing the App....69
7.1.3 Logging In to the App....69
7.1.4 Operations Related to the Advanced User....74
7.1.4.1 Setting Grid Parameters....74
7.1.4.2 Setting Protection Parameters....75
7.1.4.3 Setting Feature Parameters....75
7.1.5 Operations Related to the Special User....79
7.1.5.1 Setting Grid Parameters....80
7.1.5.2 Setting Protection Parameters....81
7.1.5.3 Setting Feature Parameters....83
7.1.5.4 Setting Power Adjustment Parameters....88
7.2 Upgrading the Inverter....91

8 Maintenance....93
8.1 System Power-Off....93
8.2 Power-Off for Troubleshooting....94
8.3 Routine Maintenance....95
8.4 Replacing a Fan....97
8.5 Alarm Reference....101
8.6 Resetting and Turning On the DC Switch....101
8.7 Locating Insulation Resistance Faults....102

9 Handling the Inverter....105
9.1 Removing the SUN2000....105
9.2 Packing the SUN2000....105
9.3 Disposing of the SUN2000....105

10 Technical Data....106

A Securing Y-Branch Connectors....110

B String Access Detection....113

C Domain Name List of Management Systems.....116
D Grid Codes.....117
E Resetting Password.....123
F Contact Information.....124
G Digital Power Customer Service.....126
H Acronyms and Abbreviations.....127

1 Safety Information

Statement

Before transporting, storing, installing, operating, using, and/or maintaining the equipment, read this document, strictly follow the instructions provided herein, and follow all the safety instructions on the equipment and in this document. In this document, "equipment" refers to the products, software, components, spare parts, and/or services related to this document; "the Company" refers to the manufacturer (producer), seller, and/or service provider of the equipment; "you" refers to the entity that transports, stores, installs, operates, uses, and/or maintains the equipment.

The **Danger**, **Warning**, **Caution**, and **Notice** statements described in this document do not cover all the safety precautions. You also need to comply with relevant international, national, or regional standards and industry practices. **The Company shall not be liable for any consequences that may arise due to violations of safety requirements or safety standards concerning the design, production, and usage of the equipment.**

The equipment shall be used in an environment that meets the design specifications. Otherwise, the equipment may be faulty, malfunctioning, or damaged, which is not covered under the warranty. The Company shall not be liable for any property loss, personal injury, or even death caused thereby.

Comply with applicable laws, regulations, standards, and specifications during transportation, storage, installation, operation, use, and maintenance.

Do not perform reverse engineering, decompilation, disassembly, adaptation, implantation, or other derivative operations on the equipment software. Do not study the internal implementation logic of the equipment, obtain the source code of the equipment software, violate intellectual property rights, or disclose any of the performance test results of the equipment software.

The Company shall not be liable for any of the following circumstances or their consequences:

- The equipment is damaged due to force majeure such as earthquakes, floods, volcanic eruptions, debris flows, lightning strikes, fires, wars, armed conflicts, typhoons, hurricanes, tornadoes, and other extreme weather conditions.
- The equipment is operated beyond the conditions specified in this document.

 Copyright © Huawei Technologies Co., Ltd.

- The equipment is installed or used in environments that do not comply with international, national, or regional standards.
- The equipment is installed or used by unqualified personnel.
- You fail to follow the operation instructions and safety precautions on the product and in the document.
- You remove or modify the product or modify the software code without authorization.
- You or a third party authorized by you cause the equipment damage during transportation.
- The equipment is damaged due to storage conditions that do not meet the requirements specified in the product document.
- You fail to prepare materials and tools that comply with local laws, regulations, and related standards.
- The equipment is damaged due to your or a third party's negligence, intentional breach, gross negligence, or improper operations, or other reasons not related to the Company.

1.1 Personal Safety

DANGER

Ensure that power is off during installation. Do not install or remove a cable with power on. Transient contact between the core of the cable and the conductor will generate electric arcs or sparks, which may cause a fire or personal injury.

DANGER

Non-standard and improper operations on the energized equipment may cause fire, electric shocks, or explosion, resulting in property damage, personal injury, or even death.

DANGER

Before operations, remove conductive objects such as watches, bracelets, bangles, rings, and necklaces to prevent electric shocks.

DANGER

During operations, use dedicated insulated tools to prevent electric shocks or short circuits. The dielectric withstanding voltage level must comply with local laws, regulations, standards, and specifications.

 Copyright © Huawei Technologies Co., Ltd.

WARNING

During operations, wear personal protective equipment such as protective clothing, insulated shoes, goggles, safety helmets, and insulated gloves.

Figure 1-1 Personal protective equipment

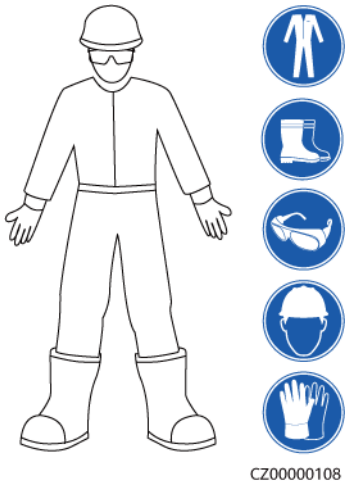

General Requirements

- Do not stop protective devices. Pay attention to the warnings, cautions, and related precautionary measures in this document and on the equipment.
- If there is a likelihood of personal injury or equipment damage during operations, immediately stop, report the case to the supervisor, and take feasible protective measures.
- Do not power on the equipment before it is installed or confirmed by professionals.
- Do not touch the power supply equipment directly or with conductors such as damp objects. Before touching any conductor surface or terminal, measure the voltage at the contact point to ensure that there is no risk of electric shock.
- Do not touch operating equipment because the enclosure is hot.
- Do not touch a running fan with your hands, components, screws, tools, or boards. Otherwise, personal injury or equipment damage may occur.
- In the case of a fire, immediately leave the building or the equipment area and activate the fire alarm or call emergency services. Do not enter the affected building or equipment area under any circumstances.

Personnel Requirements

- Only professionals and trained personnel are allowed to operate the equipment.
  - Professionals: personnel who are familiar with the working principles and structure of the equipment, trained or experienced in equipment operations and are clear of the sources and degree of various potential hazards in equipment installation, operation, maintenance

 Copyright © Huawei Technologies Co., Ltd.

  - Trained personnel: personnel who are trained in technology and safety, have required experience, are aware of possible hazards on themselves in certain operations, and are able to take protective measures to minimize the hazards on themselves and other people
- Personnel who plan to install or maintain the equipment must receive adequate training, be able to correctly perform all operations, and understand all necessary safety precautions and local relevant standards.
- Only qualified professionals or trained personnel are allowed to install, operate, and maintain the equipment.
- Only qualified professionals are allowed to remove safety facilities and inspect the equipment.
- Personnel who will perform special tasks such as electrical operations, working at heights, and operations of special equipment must possess the required local qualifications.
- Only authorized professionals are allowed to replace the equipment or components (including software).
- Only personnel who need to work on the equipment are allowed to access the equipment.

1.2 Electrical Safety

DANGER

Before connecting cables, ensure that the equipment is intact. Otherwise, electric shocks or fire may occur.

DANGER

Non-standard and improper operations may result in fire or electric shocks.

DANGER

Prevent foreign matter from entering the equipment during operations. Otherwise, equipment short-circuits or damage, load power derating, power failure, or personal injury may occur.

WARNING

For the equipment that needs to be grounded, install the ground cable first when installing the equipment and remove the ground cable last when removing the equipment.

 Copyright © Huawei Technologies Co., Ltd.

WARNING

During the installation of PV strings and the inverter, the positive or negative terminals of PV strings may be short-circuited to ground if the power cables are not properly installed or routed. In this case, an AC or DC short circuit may occur and damage the inverter. The resulting device damage is not covered under any warranty.

CAUTION

Do not route cables near the air intake or exhaust vents of the equipment.

General Requirements

- Follow the procedures described in the document for installation, operation, and maintenance. Do not reconstruct or alter the equipment, add components, or change the installation sequence without permission.
- Obtain approval from the national or local electric utility company before connecting the equipment to the grid.
- Observe the power plant safety regulations, such as the operation and work ticket mechanisms.
- Install temporary fences or warning ropes and hang "No Entry" signs around the operation area to keep unauthorized personnel away from the area.
- Before installing or removing power cables, turn off the switches of the equipment and its upstream and downstream switches.
- Before performing operations on the equipment, check that all tools meet the requirements and record the tools. After the operations are complete, collect all of the tools to prevent them from being left inside the equipment.
- Before installing power cables, check that cable labels are correct and cable terminals are insulated.
- When installing the equipment, use a torque tool of a proper measurement range to tighten the screws. When using a wrench to tighten the screws, ensure that the wrench does not tilt and the torque error does not exceed 10% of the specified value.
- Ensure that bolts are tightened with a torque tool and marked in red and blue after double-check. Installation personnel mark tightened bolts in blue. Quality inspection personnel confirm that the bolts are tightened and then mark them in red. (The marks must cross the edges of the bolts.)

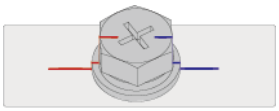

CZ0000112

- If the equipment has multiple inputs, disconnect all the inputs before operating the equipment.
- Before maintaining a downstream electrical or power distribution device, turn off the output switch on the power supply equipment.

 Copyright © Huawei Technologies Co., Ltd.

- During equipment maintenance, attach "Do not switch on" labels near the upstream and downstream switches or circuit breakers as well as warning signs to prevent accidental connection. The equipment can be powered on only after troubleshooting is complete.
- Do not open equipment panels.
- Check equipment connections periodically, ensuring that all screws are securely tightened.
- Only qualified professionals can replace a damaged cable.
- Do not scrawl, damage, or block any labels or nameplates on the equipment. Promptly replace labels that have worn out.
- Do not use solvents such as water, alcohol, or oil to clean electrical components inside or outside of the equipment.

Grounding

- Ensure that the grounding impedance of the equipment complies with local electrical standards.
- Ensure that the equipment is connected permanently to the protective ground. Before operating the equipment, check its electrical connection to ensure that it is reliably grounded.
- Do not work on the equipment in the absence of a properly installed ground conductor.
- Do not damage the ground conductor.

Cabling Requirements

- When selecting, installing, and routing cables, follow local safety regulations and rules.
- When routing power cables, ensure that there is no coiling or twisting. Do not join or weld power cables. If necessary, use a longer cable.
- Ensure that all cables are properly connected and insulated, and meet specifications.
- Ensure that the slots and holes for routing cables are free from sharp edges, and that the positions where cables are routed through pipes or cable holes are equipped with cushion materials to prevent the cables from being damaged by sharp edges or burrs.
- Ensure that cables of the same type are bound together neatly and straight and that the cable sheath is intact. When routing cables of different types, ensure that they are away from each other without entanglement and overlapping.
- Secure buried cables using cable supports and cable clips. Ensure that the cables in the backfill area are in close contact with the ground to prevent cable deformation or damage during backfilling.
- If the external conditions (such as the cable layout or ambient temperature) change, verify the cable usage in accordance with the IEC-60364-5-52 or local laws and regulations. For example, check that the current-carrying capacity meets requirements.
- When routing cables, reserve at least 30 mm clearance between the cables and heat-generating components or areas. This prevents deterioration or damage to the cable insulation layer.

 Copyright © Huawei Technologies Co., Ltd.

1.3 Environment Requirements

DANGER

Do not expose the equipment to flammable or explosive gas or smoke. Do not perform any operation on the equipment in such environments.

DANGER

Do not store any flammable or explosive materials in the equipment area.

DANGER

Do not place the equipment near heat sources or fire sources, such as smoke, candles, heaters, or other heating devices. Overheat may damage the equipment or cause a fire.

WARNING

Install the equipment in an area far away from liquids. Do not install it under areas prone to condensation, such as under water pipes and air exhaust vents, or areas prone to water leakage, such as air conditioner vents, ventilation vents, or feeder windows of the equipment room. Ensure that no liquid enters the equipment to prevent faults or short circuits.

WARNING

To prevent damage or fire due to high temperature, ensure that the ventilation vents or heat dissipation systems are not obstructed or covered by other objects while the equipment is running.

General Requirements

- Store the equipment according to the storage requirements. Equipment damage caused by unqualified storage conditions is not covered under the warranty.
- Keep the installation and operating environments of the equipment within the allowed ranges. Otherwise, its performance and safety will be compromised.
- The operating temperature range provided in the equipment's technical specifications refers to the ambient temperatures in equipment's installation environment.

 Copyright © Huawei Technologies Co., Ltd.

- Do not install, use, or operate outdoor equipment and cables (including but not limited to moving equipment, operating equipment and cables, inserting connectors to or removing connectors from signal ports connected to outdoor facilities, working at heights, performing outdoor installation, and opening doors) in harsh weather conditions such as lightning, rain, snow, and level 6 or stronger wind.
- Do not install the equipment in an environment with dust, smoke, volatile or corrosive gases, infrared and other radiations, organic solvents, or salty air.
- Do not install the equipment in an environment with conductive metal or magnetic dust.
- Do not install the equipment in an area conducive to the growth of microorganisms such as fungus or mildew.
- Do not install the equipment in an area with strong vibration, noise, or electromagnetic interference. The equipment shall be installed in an environment with a magnetic field strength less than 4 Gauss. If the magnetic field strength is greater than or equal to 4 Gauss, the equipment may fail to work properly. If the magnetic field strength is high, for example, in a smeltery, you are advised to use a gauss meter to measure the magnetic field strength of the equipment installation position when the smelting equipment is running normally.
- Ensure that the site complies with local laws, regulations, and related standards.
- Ensure that the ground in the installation environment is solid, free from spongy or soft soil, and not prone to subsidence. The site must not be located in a low-lying land prone to water or snow accumulation, and the horizontal level of the site must be above the highest water level of that area in history.
- Do not install the equipment in a position that may be submerged in water.
- If the equipment is installed in a place with abundant vegetation, in addition to routine weeding, harden the ground underneath the equipment using cement or gravel (the area shall be greater than or equal to 3 m x 2.5 m).
- Do not install the equipment outdoors in salt-affected areas because it may be corroded. A salt-affected area refers to the region within 500 m of the coast or prone to sea breeze. Regions prone to sea breeze vary with weather conditions (such as typhoons and monsoons) or terrains (such as dams and hills).
- Before opening doors during the installation, operation, and maintenance of the equipment, clean up any water, ice, snow, or other foreign objects on the top of the equipment to prevent foreign objects from falling into the equipment.
- When installing the equipment, ensure that the installation surface is solid enough to bear the weight of the equipment.
- After installing the equipment, remove the packing materials such as cartons, foam, plastics, and cable ties from the equipment area.

 Copyright © Huawei Technologies Co., Ltd.

1.4 Mechanical Safety

WARNING

Ensure that all necessary tools are ready and inspected by a professional organization. Do not use tools that have signs of scratches or fail to pass the inspection or whose inspection validity period has expired. Ensure that the tools are secure and not overloaded.

WARNING

Do not drill holes into the equipment. Doing so may affect the sealing performance and electromagnetic containment of the equipment and damage components or cables inside. Metal shavings from drilling may short-circuit boards inside the equipment.

General Requirements

- Repaint any paint scratches caused during equipment transportation or installation in a timely manner. Equipment with scratches must not be exposed for an extended period of time.
- Do not perform operations such as arc welding and cutting on the equipment without evaluation by the Company.
- Do not install other devices on the top of the equipment without evaluation by the Company.
- When performing operations over the top of the equipment, take measures to protect the equipment against damage.
- Use correct tools and operate them in the correct way.

Moving Heavy Objects

- Be cautious to prevent injury when moving heavy objects.

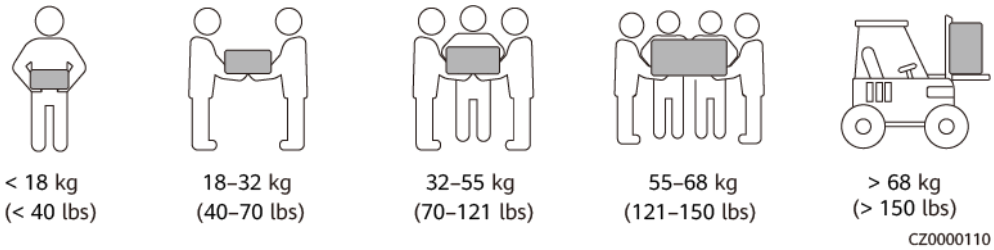

- If multiple persons need to move a heavy object together, determine the manpower and work division with consideration of height and other conditions to ensure that the weight is equally distributed.
- If two persons or more move a heavy object together, ensure that the object is lifted and landed simultaneously and moved at a uniform pace under the supervision of one person.

 Copyright © Huawei Technologies Co., Ltd.

- Wear personal protective gears such as protective gloves and shoes when manually moving the equipment.
- To move an object by hand, approach to the object, squat down, and then lift the object gently and stably by the force of the legs instead of your back. Do not lift it suddenly or turn your body around.
- Do not quickly lift a heavy object above your waist. Place the object on a workbench that is half-waist high or any other appropriate place, adjust the positions of your palms, and then lift it.
- Move a heavy object stably with balanced force at an even and low speed. Put down the object stably and slowly to prevent any collision or drop from scratching the surface of the equipment or damaging the components and cables.
- When moving a heavy object, be aware of the workbench, slope, staircase, and slippery places. When moving a heavy object through a door, ensure that the door is wide enough to move the object and avoid bumping or injury.
- When transferring a heavy object, move your feet instead of turning your waist around. When lifting and transferring a heavy object, ensure that your feet point to the target direction of movement.
- When transporting the equipment using a pallet truck or forklift, ensure that the tynes are properly positioned so that the equipment does not topple. Before moving the equipment, secure it to the pallet truck or forklift using ropes. When moving the equipment, assign dedicated personnel to take care of it.
- Choose sea, roads in good conditions, or airplanes for transportation. Do not transport the equipment by railway. Avoid tilt or jolt during transportation.

Using Ladders

- Use wooden or insulated ladders when you need to perform live-line working at heights.
- Platform ladders with protective rails are preferred. Single ladders are not recommended.
- Before using a ladder, check that it is intact and confirm its load bearing capacity. Do not overload it.
- Ensure that the ladder is securely positioned and held firm.

CZ00000107

- When climbing up the ladder, keep your body stable and your center of gravity between the side rails, and do not overreach to the sides.

- When a step ladder is used, ensure that the pull ropes are secured.
- If a single ladder is used, the recommended angle for the ladder against the floor is 75 degrees, as shown in the following figure. A square can be used to measure the angle.

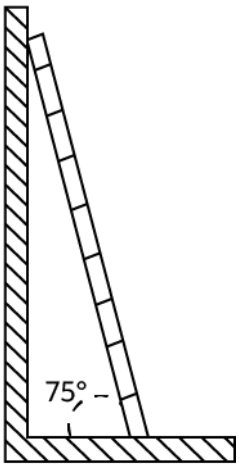

PI02SC0008

- If a single ladder is used, ensure that the wider end of the ladder is at the bottom, and take protective measures to prevent the ladder from sliding.
- If a single ladder is used, do not climb higher than the fourth rung of the ladder from the top.
- If you use a single ladder to climb up to a platform, ensure that the ladder is at least 1 m higher than the platform.

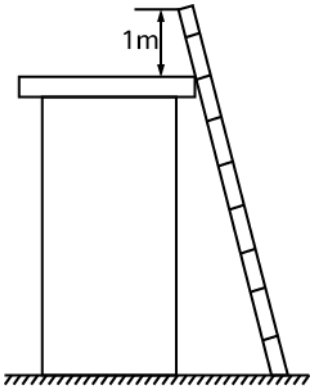

PI02SC0009

Hoisting

- Only trained and qualified personnel are allowed to perform hoisting operations.
- Install temporary warning signs or fences to isolate the hoisting area.
- Ensure that the foundation where hoisting is performed on meets the load-bearing requirements.
- Before hoisting objects, ensure that hoisting tools are firmly secured onto a fixed object or wall that meets the load-bearing requirements.
- During hoisting, do not stand or walk under the crane or the hoisted objects.
- Do not drag steel ropes and hoisting tools or bump the hoisted objects against hard objects during hoisting.

 Copyright © Huawei Technologies Co., Ltd.

- Ensure that the angle between two hoisting ropes is no more than 90 degrees, as shown in the following figure.

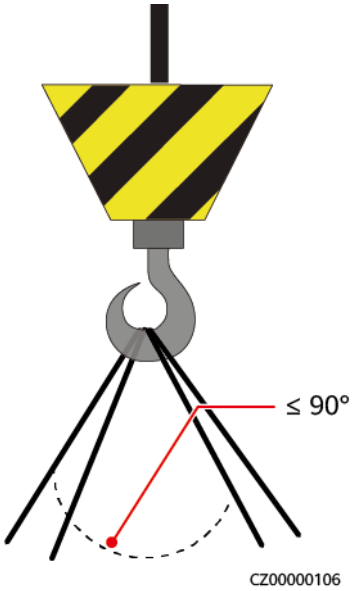

Drilling Holes

- Obtain consent from the customer and contractor before drilling holes.
- Wear protective equipment such as safety goggles and protective gloves when drilling holes.
- To avoid short circuits or other risks, do not drill holes into buried pipes or cables.
- When drilling holes, protect the equipment from shavings. After drilling, clean up any shavings.

 Copyright © Huawei Technologies Co., Ltd.

2 Overview

2.1 Product Overview

Function

The SUN2000 is a three-phase grid-tied PV string inverter that converts the DC power generated by PV strings into AC power and feeds the power into the power grid.

Model

This document involves the following product models:

- SUN2000-196KTL-H0
- SUN2000-200KTL-H2
- SUN2000-215KTL-H0

Figure 2-1 Model (SUN2000-196KTL-H0 is used as an example)

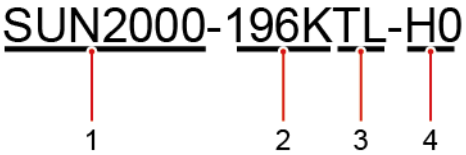

Table 2-1 Model description

No.	Meaning	Description
1	Product family identifier	SUN2000: grid-tied solar inverter
2	Power level identifier	196K: The power level is 196 kW. 200K: The power level is 200 kW. 215K: The power level is 215 kW.

 Copyright © Huawei Technologies Co., Ltd.

No.	Meaning	Description
3	Topology identifier	TL: transformerless
4	Product series identifier	H0/H2: the product series with the 1500 V DC input voltage

NOTE

- The SUN2000-196KTL-H0 is applicable only to the Chinese mainland. For other countries or regions, Huawei does not provide quality assurance.
- The SUN2000-196KTL-H0, SUN2000-200KTL-H2, and SUN2000-215KTL-H0 inverters described in this document must not be connected to a winding (of the transformer station) that has other models of inverters connected to it.

Networking Application

The SUN2000 applies to grid-tied PV systems for commercial rooftop projects and utility-scale plants. Typically, a grid-tied PV system consists of the PV string, SUN2000, AC power distribution unit, and step-up transformer.

Figure 2-2 Networking application

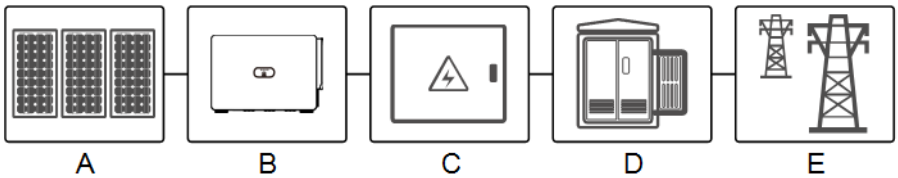

(A) PV string (B) SUN2000 (C) AC power distribution unit

(D) Step-up transformer (E) Power grid

NOTE

The SUN2000 is powered by a dedicated power transformer instead of connecting to low-voltage overhead power lines.

Supported Earthing Systems

The SUN2000 supports the IT earthing system.

Figure 2-3 Earthing system

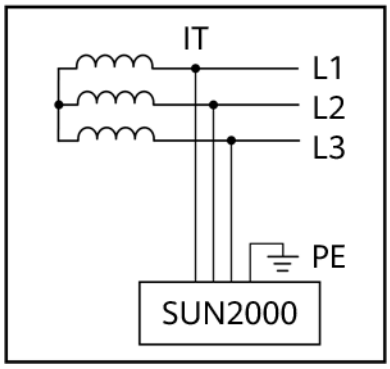

NOTE

The SUN2000 supports the IT earthing system in PV-only scenarios. The use of the SUN2000 in other types of earthing systems, such as TT, TN-C, and TN-C-S, is not recommended. (If such an earthing system is encountered, contact the Company's engineers.)

2.2 Appearance

Dimensions

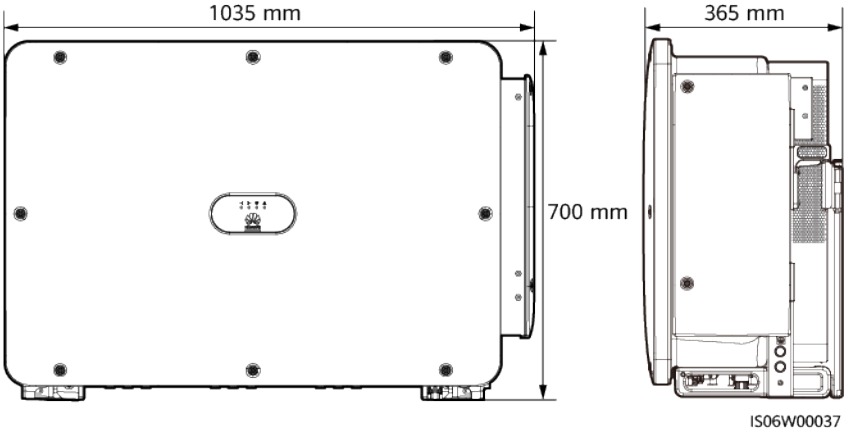

Front View

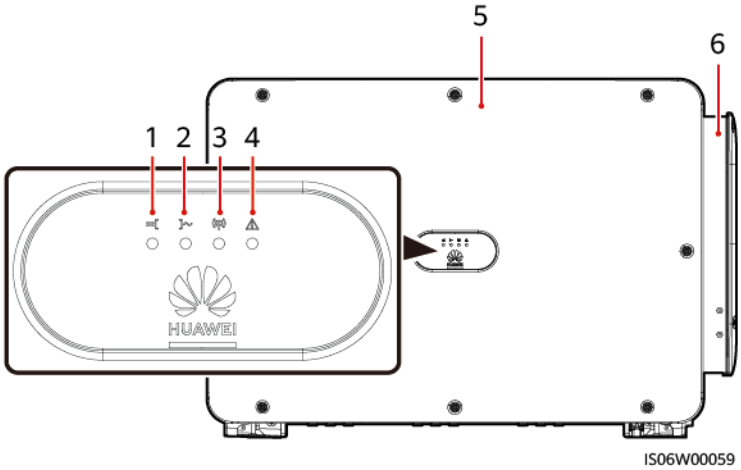

(1) PV connection indicator	(2) Grid connection indicator	(3) Communication indicator
(4) Alarm/Maintenance indicator	(5) Host panel	(6) Maintenance compartment

Table 2-2 LED description

Display Category	Indicator Status		Meaning
PV indication 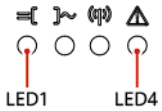	LED1	LED4	-
	Steady green	-	At least one PV string is properly connected, and the DC input voltage of the corresponding MPPT circuit is at least 500 V.
	Blinking green at short intervals	Red	An environmental fault occurs at DC side.
	Off	-	The inverter disconnects from all PV strings, or the DC input voltage of all MPPT circuits is less than 500 V.
Grid connection indication 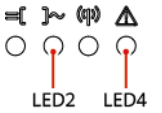	LED2	LED4	NA
	Steady green	-	The inverter is in grid-tied mode.
	Blinking green at short intervals	Red	An environmental fault occurs at AC side.
	Off	-	The inverter is not in grid-tied mode.
Communications indication 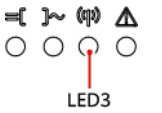	LED3		-
	Blinking green at short intervals		The inverter receives data over RS485 or MBUS communication.
	Off		The inverter has not received data over RS485 or MBUS communication for 10 seconds.
Alarm/O&M indication 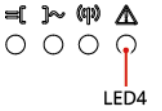	LED4		-
	Steady red		A major alarm is generated. If the PV connection indicator and grid connection indicator are both not blinking green fast, replace components or the solar inverter as instructed by the SUN2000 app.
	Blinking red at short intervals		A minor alarm is generated.
	Blinking red at long intervals		A warning alarm is generated.
	Steady green		Local maintenance succeeds.
	Blinking green at long intervals		In local maintenance or shuts down over a command.

 Copyright © Huawei Technologies Co., Ltd.

Display Category	Indicator Status	Meaning
	Blinking green at short intervals	Local maintenance fails.
	Off	No alarm is generated, and no local maintenance operations are performed.

NOTE

- Local maintenance refers to operations performed after a universal serial bus (USB) flash drive, Bluetooth module, WLAN module, or USB data cable is inserted into the USB port of the inverter. For example, local maintenance includes configuration import and export using a USB flash drive, and connecting to the SUN2000 app over a Bluetooth module, WLAN module, or USB data cable.
- If the alarming and the local maintenance happen concurrently, the alarm/maintenance indicator shows the local maintenance state first. After the USB flash drive, Bluetooth module, WLAN module, or USB data cable is removed, the indicator shows the alarm state.

Bottom View

NOTE

The DC switch of the current model can be manual or automatic.

Figure 2-4 Port Illustration (Manual DC Switch)

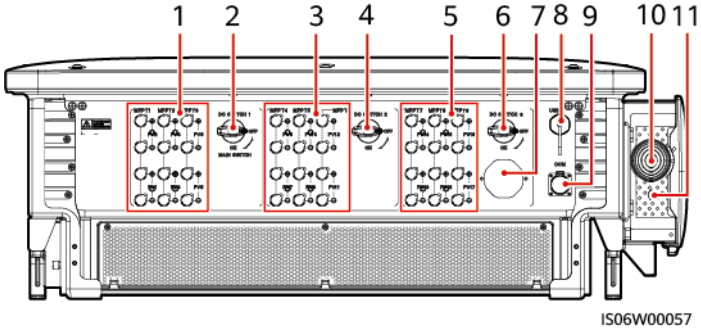

(1) DC input terminals (controlled by DC SWITCH 1)

(2) DC switch 1 (DC SWITCH 1)

(3) DC input terminals (controlled by DC SWITCH 2)

(4) DC switch 2 (DC SWITCH 2)

(5) DC input terminals (controlled by DC SWITCH 3)

(6) DC switch 3 (DC SWITCH 3)

(7) Ventilation valve

(8) USB port (USB)

(9) Communications port (COM)

(10) Hole for the AC output power cable

 Copyright © Huawei Technologies Co., Ltd.

(11) Hole for the tracking system power cable

Figure 2-5 Port Illustration (Automatic DC Switch)

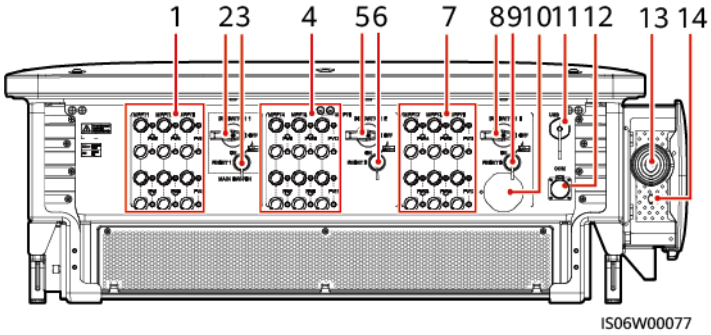

(1) DC input terminals (controlled by DC SWITCH 1)	(2) DC switch 1 (DC SWITCH 1)
(3) Reset button 1 (RESET 1)	(4) DC input terminals (controlled by DC SWITCH 2)
(5) DC switch 2 (DC SWITCH 2)	(6) Reset button 2 (RESET 2)
(7) DC input terminals (controlled by DC SWITCH 3)	(8) DC switch 3 (DC SWITCH 3)
(9) Reset button 3 (RESET 3)	(10) Ventilation valve
(11) USB port (USB)	(12) Communications port (COM)
(13) Hole for the AC output power cable	(14) Hole for the tracking system power cable

DC Switch Description

DANGER

The DC switches automatically turn off when a fault occurs in the inverters (LED4 is steady red, and the three DC switches are OFF). In this case, contact your technical support. Do not turn on the DC switches by yourself.

 Copyright © Huawei Technologies Co., Ltd.

Table 2-3 DC Switch Description

Switch Component	Description	
DC SWITCH	**ON**	The DC switch is **ON** and can automatically turn off for protection.
		The DC switch is **ON** but cannot automatically turn off for protection.
	OFF	The DC switch is **OFF**.
RESET	• When the DC switch automatically turns off for protection, the RESET button will be released. • When the RESET button is not pressed, the DC switch can only be turned to the unloaded position, and cannot be set to the **ON** position.	

2.3 Label Description

2.3.1 Enclosure Labels

Symbol	Name	Meaning
	Operation warning	Potential hazards exist after the inverter is powered on. Take protective measures when operating the inverter.
	High temperature hazard	Do not touch the inverter when it is running because its enclosure is hot.
	Electric shock hazard	Hazardous voltage exists after the device is powered on. Take protective measures during operation and maintenance (O&M).
15 mins	Delayed discharge	• High voltage exists after the inverter is powered on. Only qualified and trained electrical technicians are allowed to perform operations on the inverter. • Residual voltage exists after the inverter is powered off. It takes 15 minutes for the inverter to discharge to the safe voltage.

 Copyright © Huawei Technologies Co., Ltd.

Symbol	Name	Meaning
	Refer to documentation	Reminds operators to refer to the documentation for the device. Losses caused by operations that do not comply with the requirements of site selection, storage, or mounting specified in the user manual are not covered under the warranty.
	Grounding	Indicates the position for connecting the protective earthing (PE) cable.
	Operation warning	Do not remove the DC input connector when the inverter is running.
	Switch operation warning	If the energy of the DC switch is discharged, it may fail to switch off automatically.
	Switch energy discharge warning	This position indicates that the energy of the DC switch is discharged. Do not set the DC switch to this position.
	Fan operation warning	High voltage exists after the inverter is powered on. Do not touch the fans when the inverter is working.
	Fan replacement warning	Before replacing the fan, disconnect its power connector.
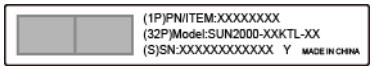	Inverter SN label	Indicates the inverter serial number.
	Weight label	The inverter needs to be carried by four persons or using a forklift.

2.3.2 Product Nameplate

Figure 2-6 Nameplate (SUN2000-196KTL-H0 is used as an example)

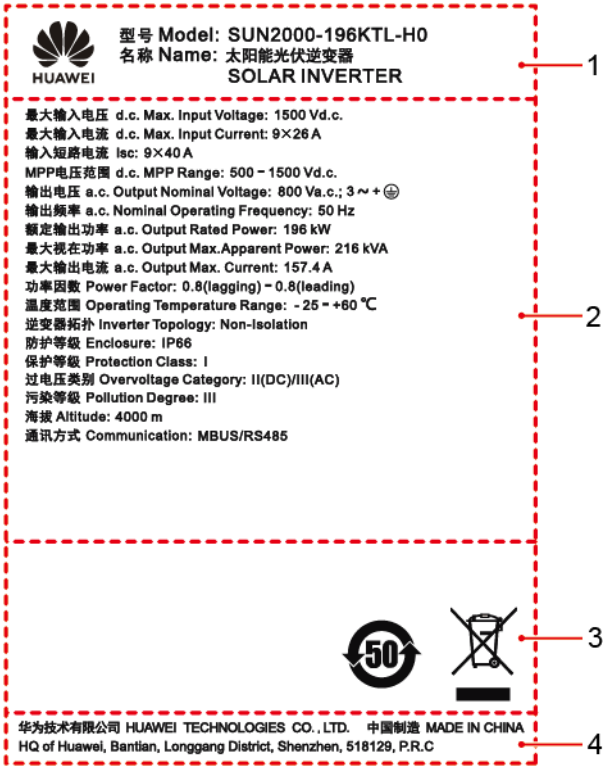

(1) Trademark and product model

(2) Important technical specifications

(3) Compliance symbols

(4) Company name and country of manufacture

NOTE

The nameplate figure is for reference only.

2.4 Working Principles

2.4.1 Circuit Diagram

The inverter receives inputs from 18 PV strings. Then the inputs are grouped into nine MPPT circuits inside the inverter to track the maximum power point of the PV strings. The DC power is then converted into three-phase AC power through an inverter circuit. Surge protection is supported on both the DC and AC sides.

 Copyright © Huawei Technologies Co., Ltd.

Figure 2-7 Inverter conceptual diagram

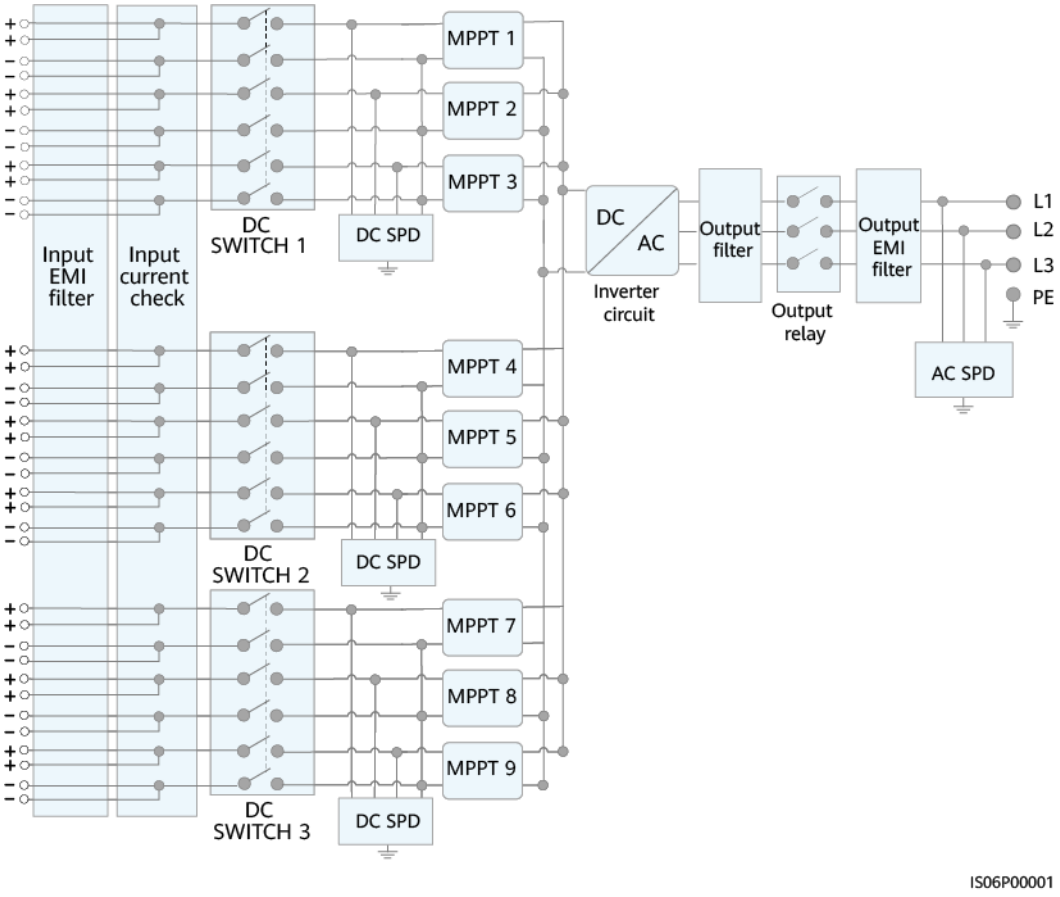

2.4.2 Working Modes

The SUN2000 can work in Standby, Operating, or Shutdown mode.

Figure 2-8 Working modes

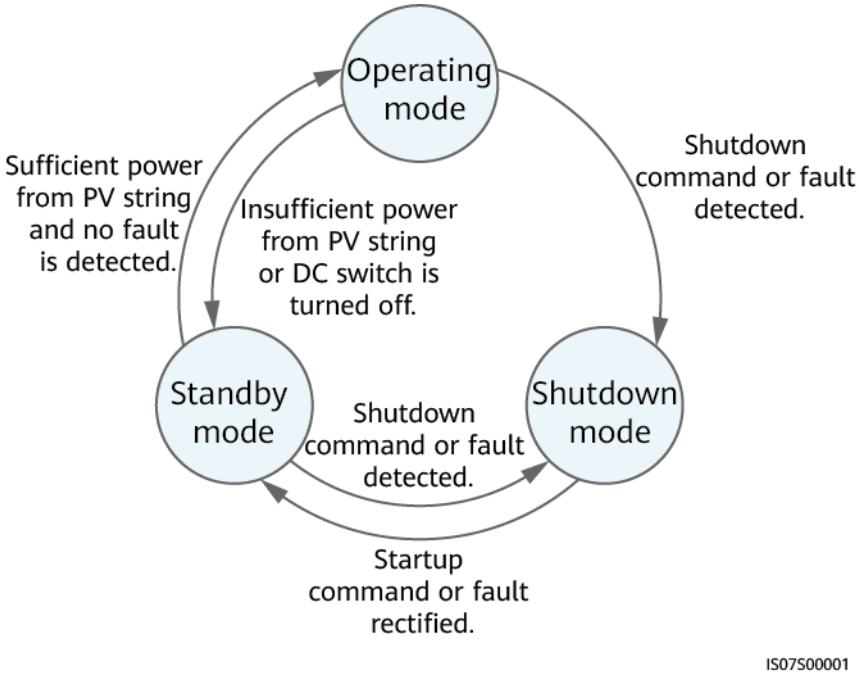

Table 2-4 Working mode description

Working Mode	Description
Standby	The SUN2000 enters Standby mode when the external environment does not meet the operating requirements. In Standby mode: ● The SUN2000 continuously performs status check and enters the Operating mode once the operating requirements are met. ● The SUN2000 enters Shutdown mode after detecting a shutdown command or a fault after startup.
Operating	In Operating mode: ● The SUN2000 converts DC power from PV strings into AC power and feeds the power to the power grid. ● The SUN2000 tracks the maximum power point to maximize the PV string output. ● If the SUN2000 detects a fault or a shutdown command, it enters the Shutdown mode. ● The SUN2000 enters Standby mode after detecting that the PV string output power is not suitable for connecting to the power grid for generating power.
Shutdown	● In Standby or Operating mode, the SUN2000 enters Shutdown mode after detecting a fault or shutdown command. ● In Shutdown mode, the SUN2000 enters Standby mode after detecting a startup command or that the fault is rectified.

 Copyright © Huawei Technologies Co., Ltd.

2.5 Smart I-V Curve Diagnosis

The inverter supports the Smart I-V Curve Diagnosis function. For details, see the **iMaster NetEco V600R023C00 Smart I-V Curve Diagnosis User Manual**.

 Copyright © Huawei Technologies Co., Ltd.

3 Storage Requirements

NOTICE

Store the device according to the storage requirements. Device damage caused by unqualified storage conditions is not covered under the warranty.

If inverters will not be put into use immediately, store them according to the requirements specified in this section. Device damage caused by unqualified storage conditions is not covered under the warranty.

- Do not store the device without outer packaging.
- Do not remove the outer packaging. Check the packaging regularly (recommended: once every three months). Replace any packaging that is damaged during storage. If the inverter is unpacked but will not be used immediately, put it back to the original packaging with the desiccant, and seal with tape.
- Inverters must be stored in a clean and dry environment with appropriate temperature and humidity. The air must not contain corrosive or flammable gases.

Figure 3-1 Storage temperature and humidity

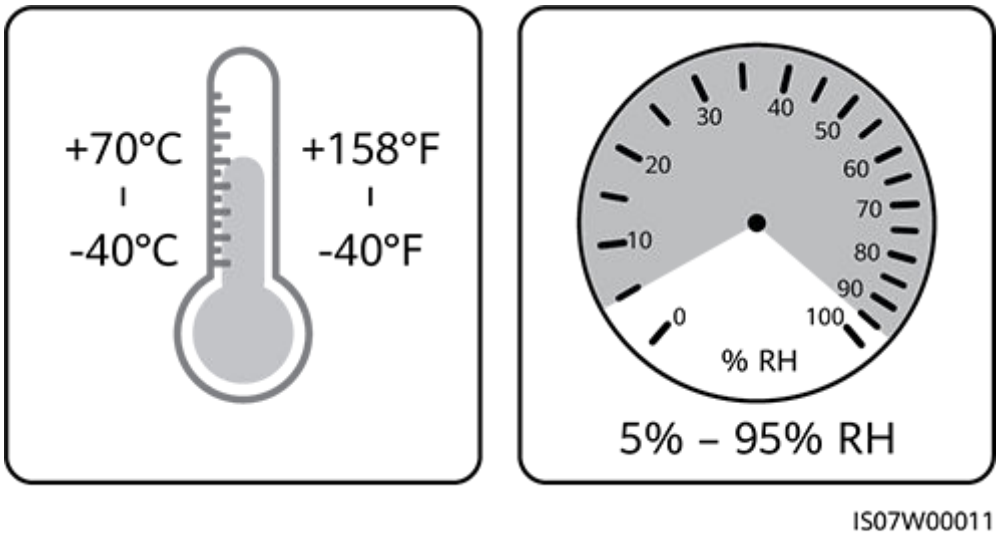

 Copyright © Huawei Technologies Co., Ltd.

- When temporarily storing inverters outdoors, do not stack them on a pallet. Take rainproof measures such as using tarpaulins to protect inverters from rain and water.
- Do not tilt a packing case or place it upside down.
- To avoid personal injury or device damage, stack inverters with caution to prevent them from falling over.

Figure 3-2 Maximum number of stacking layers

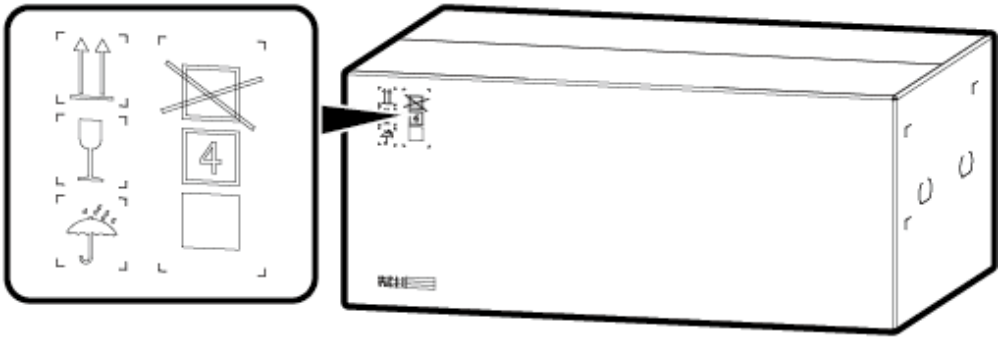

IS12W00007

- Do not store inverters for more than two years. If inverters have been stored for two years or longer, they must be checked and tested by professionals before being put into use.

4 Installation

4.1 Checking Before Installation

Outer Packing Materials

Before unpacking the inverter, check the outer packing materials for damage, such as holes and cracks, and check the inverter model. If any damage is found or the inverter model is not what you requested, do not unpack the package and contact your supplier as soon as possible.

NOTE

You are advised to remove the packing materials within 24 hours before installing the inverter.

Package Contents

NOTICE

- After placing the equipment in the installation position, unpack it with care to prevent scratches. Keep the equipment stable during unpacking.

After unpacking the inverter, check that the contents are intact and complete. If any damage is found or any component is missing, contact your supplier.

NOTE

For details about the number of contents, see the *Packing List* in the packing case.

4.2 Preparing Tools

 Copyright © Huawei Technologies Co., Ltd.

Type	Tool			
Installation tools	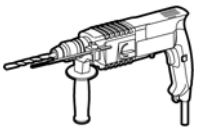 Hammer drill	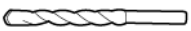 Drill bit (Φ14 mm and Φ16 mm)	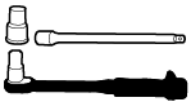 Insulated torque socket wrench (including an extension bar)	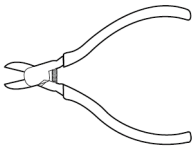 Diagonal pliers
	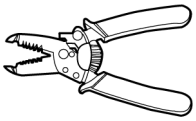 Wire stripper	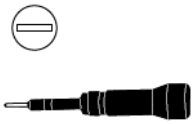 Flat-head insulated torque screwdriver Head: 0.6 mm x 3.5 mm	Rubber mallet	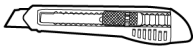 Utility knife
	Cable cutter	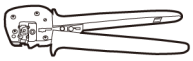 Crimping tool Model: PV-CZM-41100; manufacturer: Staubli	Removal wrench Model: 13001462; manufacturer: Staubli	Vacuum cleaner
	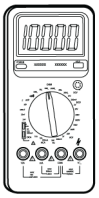 Multimeter DC voltage measurement range ≥ 1500 V DC	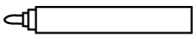 Marker	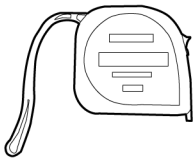 Measuring tape	Bubble or digital level

Type	Tool			
	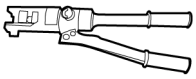 Hydraulic pliers	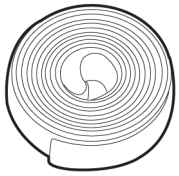 Heat shrink tubing	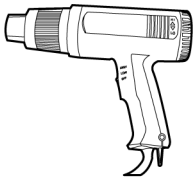 Heat gun	Cable tie
Personal protective equipment (PPE)	Protective gloves	Safety goggles	Dust mask	Safety boots
	Insulated gloves	-	-	-

4.3 Determining the Installation Position

4.3.1 Environment Requirements

Basic Requirements

- Do not install the inverter in working or living areas to avoid personal injury or property loss caused by accidental contact by non-professionals or other reasons during device operation.
- Do not install the inverter in noise-sensitive areas (such as residential areas, office areas, and schools) to avoid complaints. If the preceding areas are unavoidable, the distance between the installation position and noise-sensitive areas must be greater than or equal to 40 m. Alternatively, use other low-noise models.
- If the inverter is installed in public places (such as parking lots, stations, and factories) other than working and living areas, install a protective net outside the device and set up a safety warning sign to isolate the device. This is to avoid personal injury or property loss caused by accidental contact by non-professionals or other reasons during device operation.
- If the inverter is installed in a place with abundant vegetation, in addition to routine weeding, harden the ground underneath the inverter using cement or gravel (the area shall be greater than or equal to 3 m x 2.5 m).

 Copyright © Huawei Technologies Co., Ltd.

- Do not install the inverter in areas containing flammable materials (such as sulfur, phosphorus, liquefied petroleum gas, marsh gas, flour, and cotton) to avoid personal injury or property loss caused by fire or other reasons.
- Do not install the inverter in areas containing explosives (such as blasting agents, display shells, fireworks, and firecrackers) to avoid personal injury or property loss caused by explosion or other reasons.
- Do not install the inverter in areas with corrosive substances (such as sulfuric acid, hydrochloric acid, nitric acid, hydrogen sulfide, and chlorine) to avoid inverter failure caused by corrosion, which is not covered under the warranty.
- Do not install the inverter in an easily accessible place, because the voltage is high and its enclosure and heat sink are hot during device operation. This is to avoid personal injury or property loss caused by accidental contact by non-professionals or other reasons during device operation.
- Install the inverter in a well-ventilated environment to ensure good heat dissipation. The inverter provides self-protection in high-temperature environments. If the inverter is installed in a poorly ventilated environment, its energy yield may decrease as the ambient temperature increases.
- Do not install the equipment in an area with strong vibration, noise, or electromagnetic interference. The equipment shall be installed in an environment with a magnetic field strength less than 4 Gauss. If the magnetic field strength is greater than or equal to 4 Gauss, the equipment may fail to work properly. If the magnetic field strength is high, for example, in a smeltery, you are advised to use a gauss meter to measure the magnetic field strength of the equipment installation position when the smelting equipment is running normally.
- If the inverter is installed in an enclosed environment, a heat dissipation device or ventilation device shall be installed. The indoor ambient temperature must not be higher than the outdoor ambient temperature. The inverter provides self-protection in high-temperature environments. Its energy yield may decrease as the ambient temperature increases.
- Install the inverter in a sheltered place to prevent exposure to direct sunlight. The inverter provides self-protection in high-temperature environments. If the inverter is installed in a place subject to direct sunlight, its energy yield may decrease as the temperature increases.
- If you need to install the inverter outdoors in salt-affected areas that may cause corrosion, contact technical support. A salt-affected area refers to a region within 500 m of the coast or prone to sea breeze. Regions prone to sea breeze vary with weather conditions (such as typhoons and monsoons) or terrains (such as dams and hills).
- The positive and negative DC PV string cables within 1.5 m of the inverter shall be routed in separate pipes to prevent cable damage and short circuits caused by improper operations during construction. For details, see Figure 1.
- The distance between each inverter and the AC combiner box or the low-voltage panel of the transformer station must be at least 10 m, or the total distances from two adjacent inverters to the AC combiner box or the low-voltage panel of the transformer station must be at least 20 m. The inverter provides output resonance self-protection. Its energy yield may decrease if protection against resonance is triggered as the length of the inverter output cables decreases.

 Copyright © Huawei Technologies Co., Ltd.

- Take waterproof and insulation measures for unused DC power cables. High voltage may exist in unused DC power cables. Take measures to prevent personal injury or property damage caused by accidental contact with high voltage or other reasons.
- Cables must be vertically routed into combiner boxes and wiring terminals to avoid damage caused by horizontal stress on the terminals, which is not covered under the warranty.
- If an inverter has not been running for six months or longer after being mounted, it may have failed and must be checked and tested by professionals before being put into operation.
- To prevent the inverter from being corroded by moisture, PV terminals that will not be used for a long time must be sealed with dedicated PV terminal plugs. Inverter failure due to not using dedicated PV terminal plugs is not covered under the warranty.

Mounting Structure Requirements

- The mounting structure for the inverter must be fireproof. Do not install the inverter on flammable building materials to avoid personal injury or property loss caused by fire or other reasons.
- Do not install the inverter on flammable building materials.
- Ensure that the installation surface is solid enough to bear the weight of the inverter to avoid personal injury or property loss caused by the collapse of the mounting structure or other reasons.
- In residential areas, do not install the inverter on a drywall or wall made of similar materials which have a weak sound insulation performance because the inverter generates noise during operation.

Figure 4-1 Mounting structure

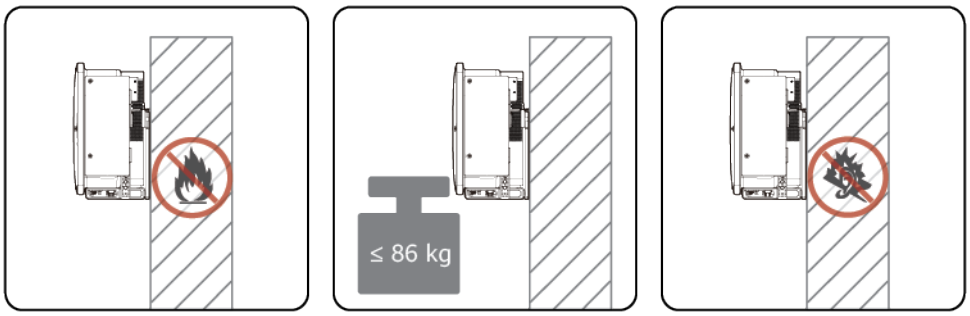

IS06H00121

4.3.2 Clearance Requirements

- Reserve sufficient clearance around the inverter for installation and heat dissipation. The inverter provides self-protection in high-temperature environments. The impact of environment changes on the clearance for heat dissipation needs be considered during design. The clearance around the inverter may become insufficient for reasons such as rotation axis change. The energy yield of the inverter may decrease if heat cannot be effectively dissipated.

 Copyright © Huawei Technologies Co., Ltd.

Figure 4-2 Clearance

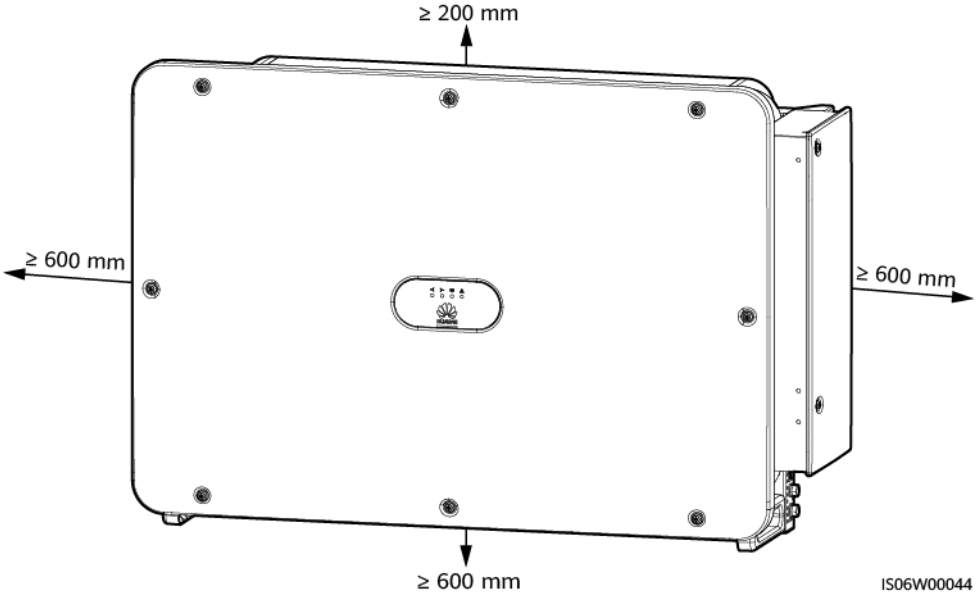

NOTE

The clearance from the bottom must meet the requirements on the bending radius of the AC output power cables.

Figure 4-3 Installation angle

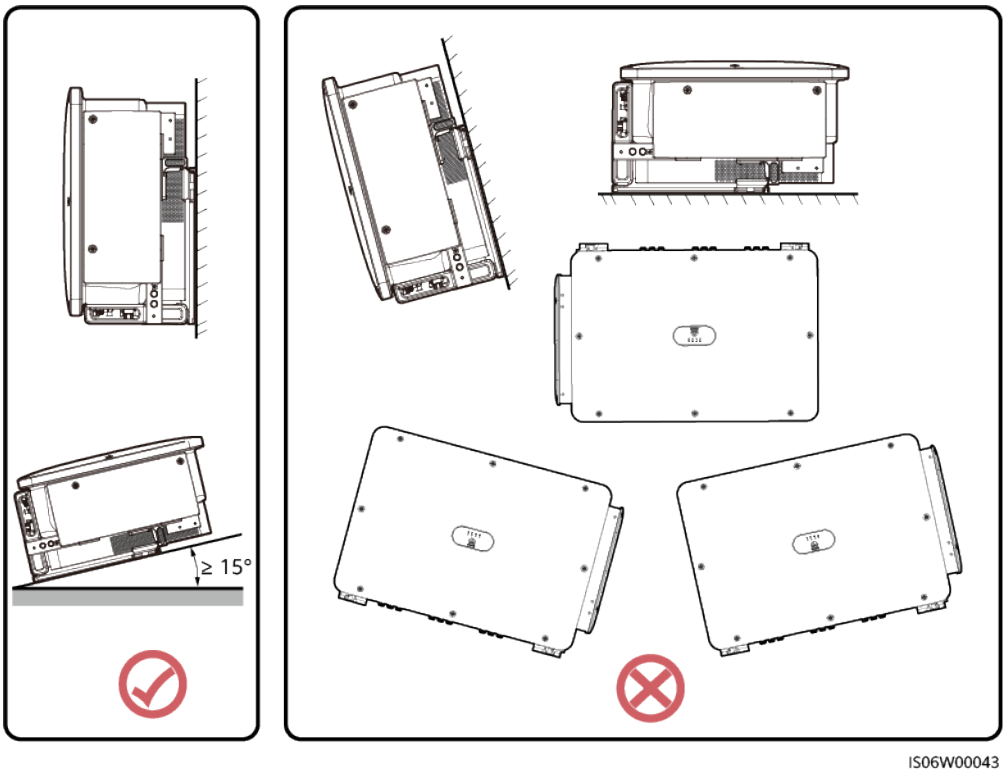

- When installing multiple SUN2000s, install them in horizontal mode if sufficient space is available and install them in triangle mode if no sufficient space is available. Stacked installation is not recommended.

Figure 4-4 Horizontal installation (recommended)

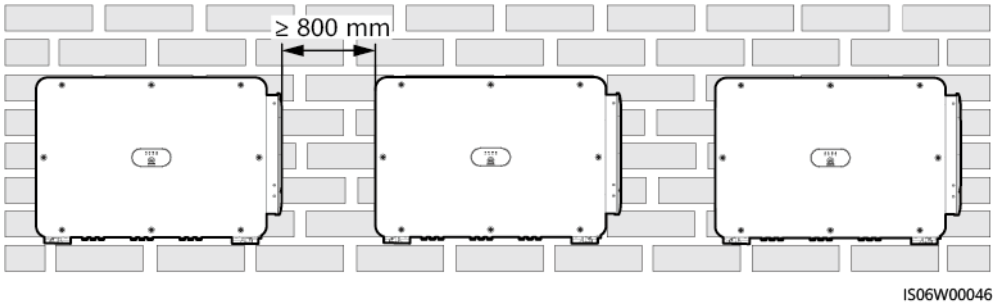

Figure 4-5 Triangle installation mode (recommended)

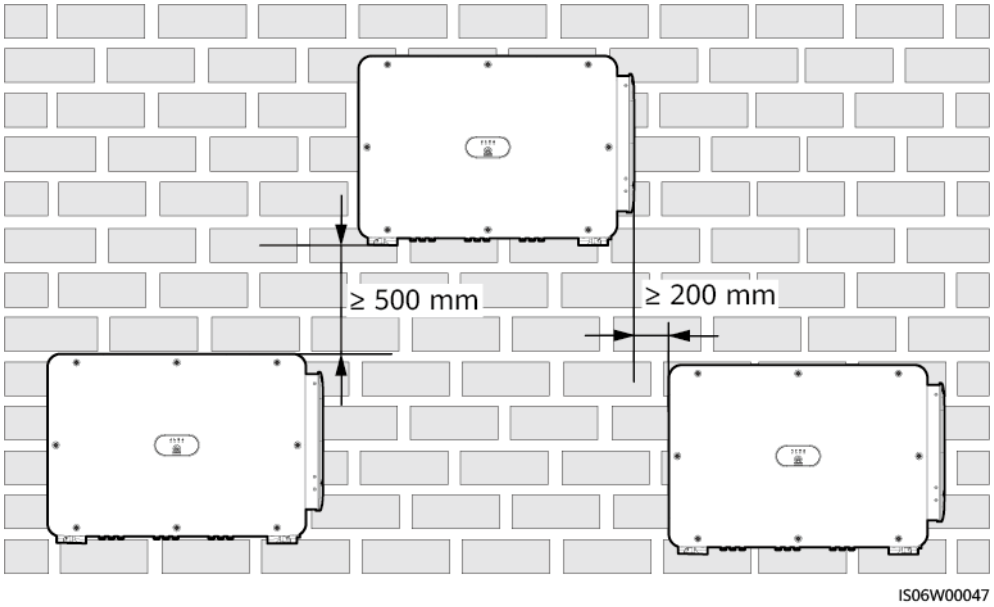

Figure 4-6 Stacked installation mode (not recommended)

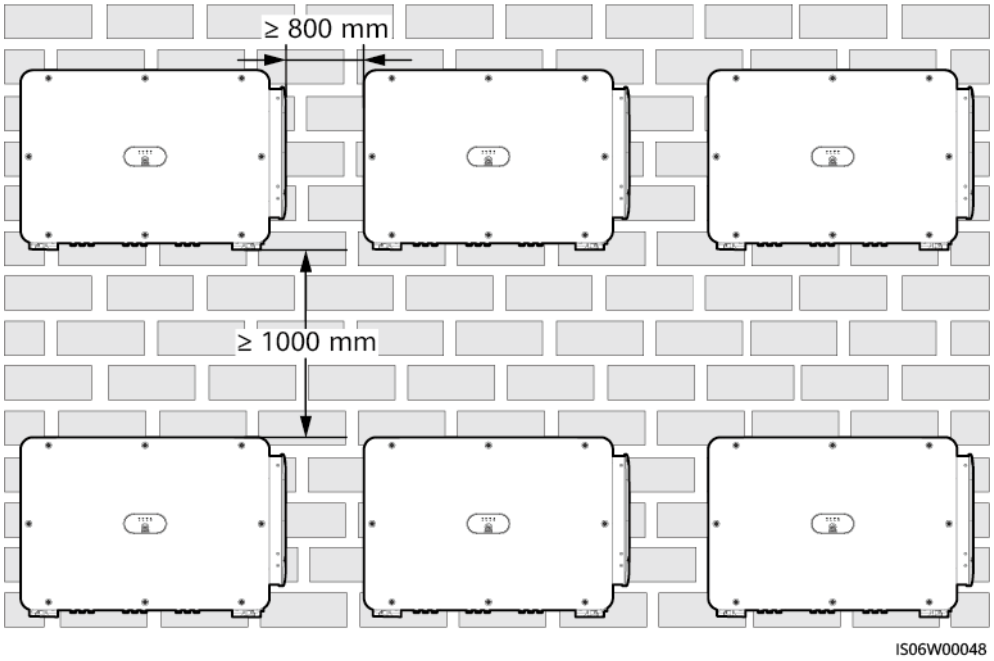

4.4 Installing the Mounting Bracket

Installation Precautions

Figure 4-7 shows the inverter mounting bracket dimensions.

Figure 4-7 Mounting bracket dimensions

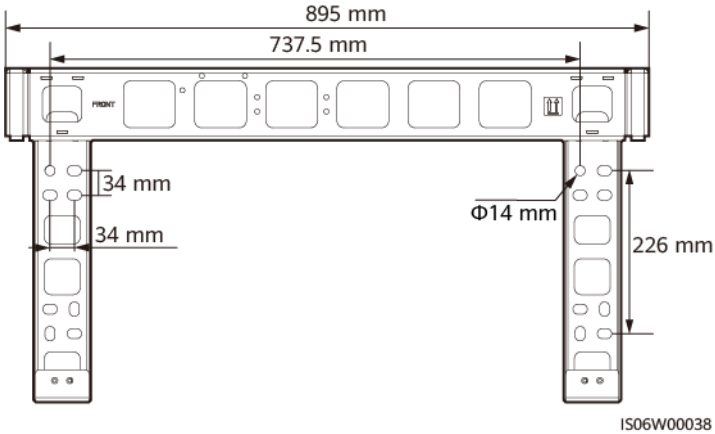

NOTE

The inverter mounting bracket has four groups of tapped holes, each group containing four tapped holes. Mark any hole in each group based on site requirements and mark four holes in total. The two round holes are recommended.

Before installing the mounting bracket, remove the security torx wrench from the mounting bracket and set it aside.

Figure 4-8 Removing a security torx wrench

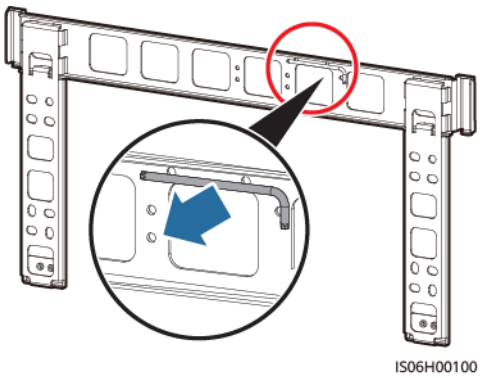

4.4.1 Support-mounted Installation

Support-mounted Installation

Step 1 Install the mounting bracket.

Figure 4-9 Installing the mounting bracket

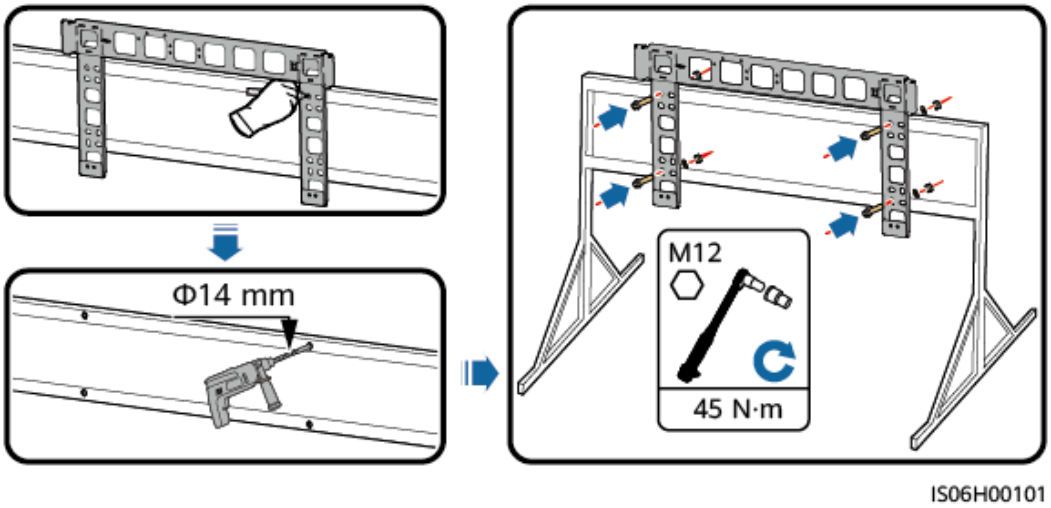

NOTE

The M12x40 bolt assemblies are delivered with the SUN2000 (bound to the mounting bracket). If the bolt assembly length does not meet the installation requirements, prepare M12 bolt assemblies by yourself and use them together with the delivered M12 nuts.

----End

4.4.2 Wall-mounted Installation

Wall-mounted Installation

Step 1 Install the mounting bracket.

WARNING

Avoid drilling holes in the water pipes and power cables buried in the wall.

NOTICE

- To prevent dust inhalation or contact with eyes, wear safety goggles and an anti-dust respirator when drilling holes.
- Clean up any dust in and around the holes using a vacuum cleaner and measure the distance between holes. If the holes are inaccurately positioned, drill a new set of holes.
- Level the head of the expansion sleeve with the concrete wall after removing the bolt, spring washer, and flat washer. Otherwise, the mounting bracket will not be securely installed on the wall.

 Copyright © Huawei Technologies Co., Ltd.

Figure 4-10 Securing the mounting bracket

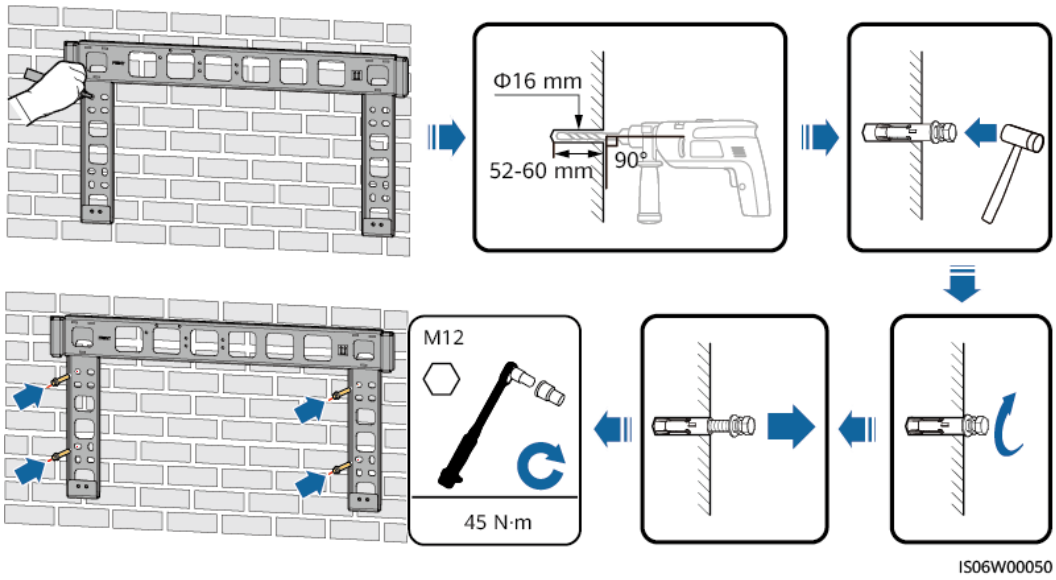

----End

4.5 Installing the Inverter

Preparing for the Installation

Before installing the inverter, take it out from the packing case and move it to the installation position.

NOTE

- Handles are packed in a fitting bag and are not delivered with the inverter.
- Secure the lifting handles (with the steel washers of the lifting handles closely fitted to the device).
- If the stud of a lifting handle is bent, replace the lifting handle in time.

Figure 4-11 Taking out and moving the inverter

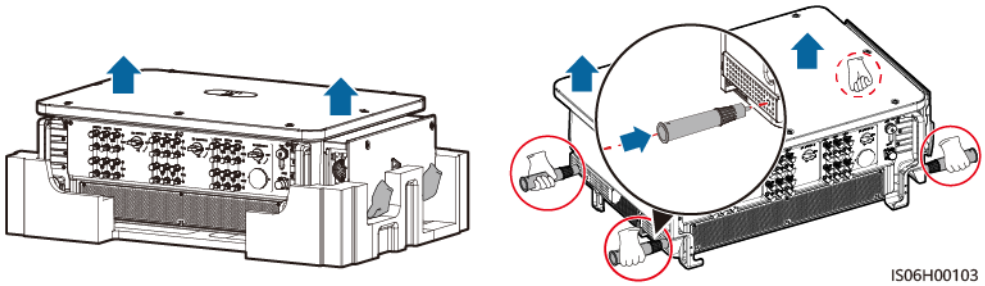

NOTICE

- Move the inverter with the help of other three persons or using an appropriate transportation tool.
- Do not place the inverter with its wiring terminals at the bottom contacting the floor or any other objects because the terminals are not designed to bear the weight of the inverter.
- When you need to temporally place the inverter on the ground, use foam, paper, or other protection material to prevent damage to its cover.
- Do not lift or hoist the inverter using the bottom holes of the handles to prevent the handles from cracking.

Figure 4-12 Lifting positions

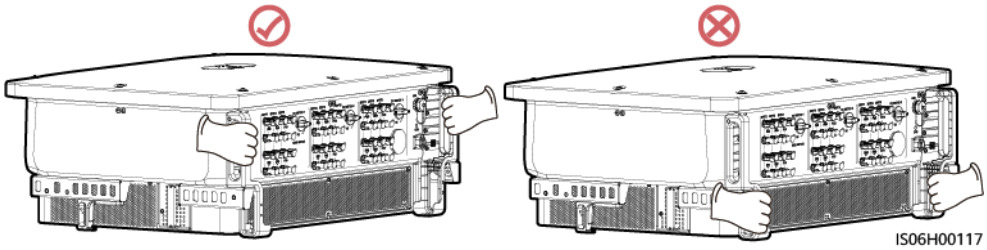

Installing the Inverter

Step 1 Mount the inverter on the mounting bracket.

Step 2 Tighten the two screws at the bottom of the inverter.

 Copyright © Huawei Technologies Co., Ltd.

Figure 4-13 Installation

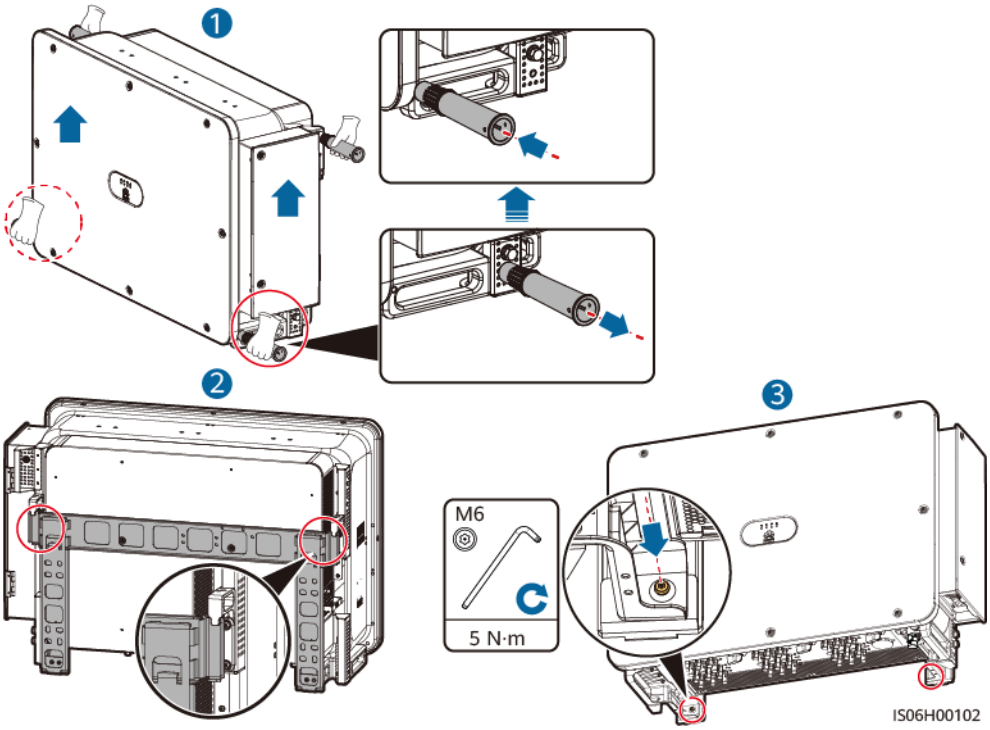

----End

Supplementary Notes

If the inverter is installed in a high position, you can hoist it.

Figure 4-14 Hoisting the inverter

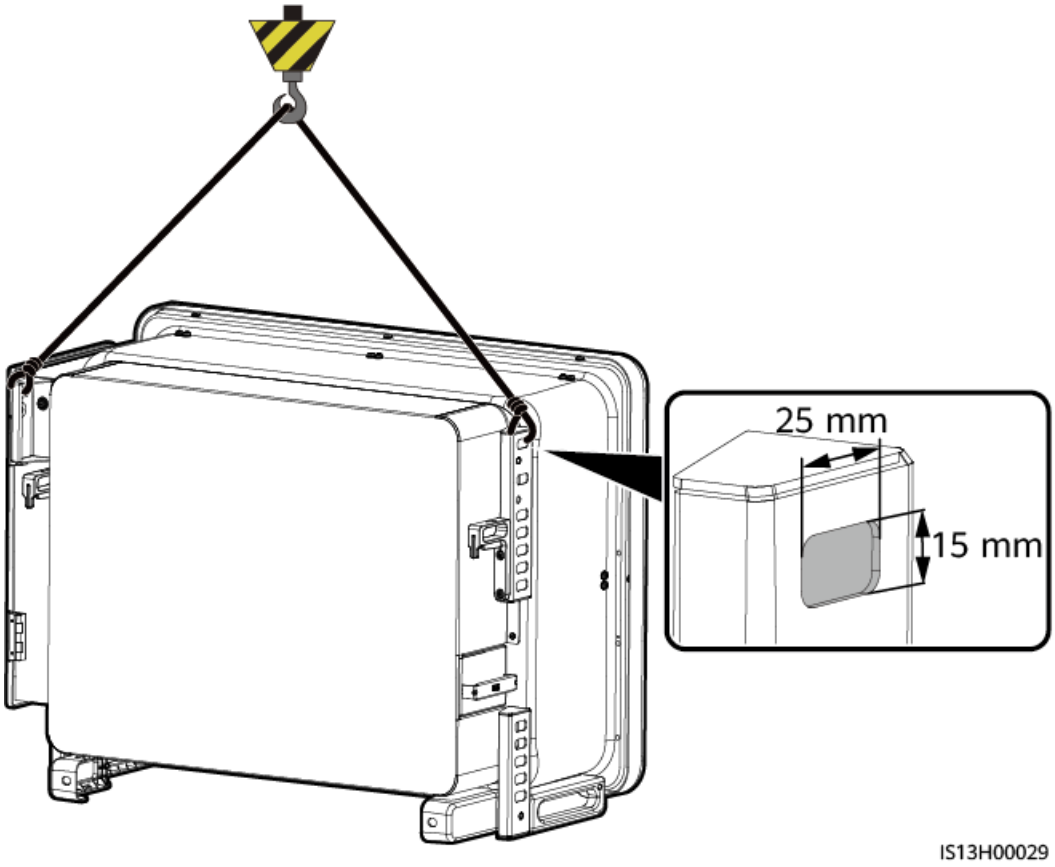

5 Electrical Connections

5.1 Precautions

DANGER

When exposed to sunlight, the PV arrays supply DC voltage to the inverter. Before connecting cables, ensure that all **DC SWITCH** on the inverter are OFF. Otherwise, the high voltage of the inverter may result in electric shocks.

DANGER

- The site must be equipped with qualified fire fighting facilities, such as fire sand and carbon dioxide fire extinguishers.
- Wear personal protective equipment and use dedicated insulated tools to avoid electric shocks or short circuits.

WARNING

- The equipment damage caused by incorrect cable connections is beyond the warranty scope.
- Only certified electrician can perform electrical terminations.
- Operation personnel must wear PPE when connecting cables.
- Before connecting cables to ports, leave enough slack to reduce the tension on the cables and prevent poor cable connections.

 Copyright © Huawei Technologies Co., Ltd.

CAUTION

- Stay away from the equipment when preparing cables to prevent cable scraps from entering the equipment. Cable scraps may cause sparks and result in personal injury and equipment damage.
- The positive and negative DC PV string cables within 1.5 m of the inverter shall be routed in separate pipes to prevent cable damage and short circuits caused by improper operations during construction.

Figure 5-1 Cable routing in different pipes

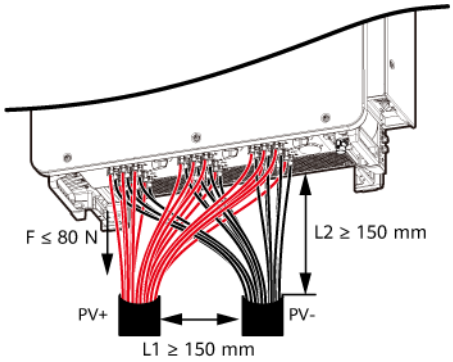

NOTE

The cable colors shown in the electrical connection diagrams provided in this section are for reference only. Select cables in accordance with local cable specifications (green-and-yellow cables are only used for protective earthing).

5.2 Crimping an OT or DT Terminal

Requirements on an OT or DT Terminal

- If a copper cable is used, use copper wiring terminals.
- If a copper-clad aluminum cable is used, use copper wiring terminals.
- If an aluminum alloy cable is used, use copper-to-aluminum wiring terminals, or aluminum wiring terminals along with copper-to-aluminum washers.

NOTICE

- Do not connect aluminum wiring terminals to the terminal block. Otherwise electrochemical corrosion may occur, affecting the reliability of cable connections.
- Comply with the IEC 61238-1 requirements when using copper-to-aluminum wiring terminals, or aluminum wiring terminals along with copper-to-aluminum washers.
- Do not mix up the aluminum and copper sides of a copper-to-aluminum washer. Ensure that the aluminum side of the washer contacts the aluminum wiring terminal, and that the copper side contacts the terminal block.

 Copyright © Huawei Technologies Co., Ltd.

Figure 5-2 Requirements on an OT or DT terminal

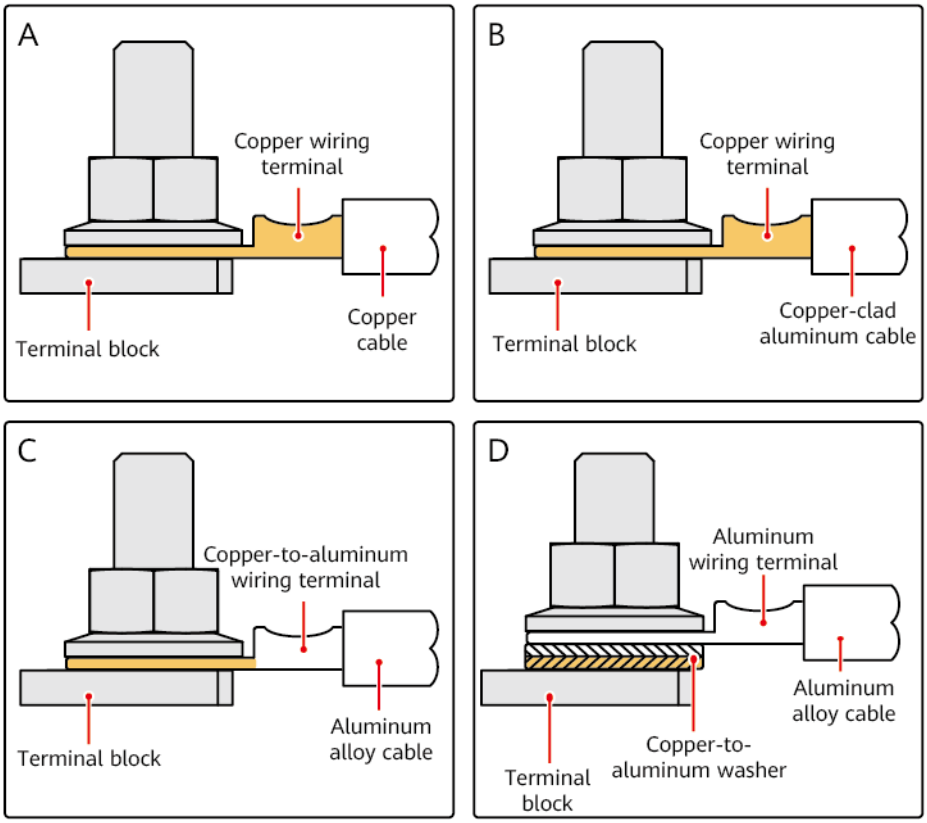

Crimping an OT or DT Terminal

NOTICE

- Avoid scratching the core wire when stripping a cable.
- The cavity formed after the conductor crimp strip of the OT or DT terminal has been crimped must wrap around the core wire completely. The core wire must make close contact with the OT or DT terminal.
- Wrap the wire crimping area with heat shrink tubing or insulation tape. The heat shrink tubing is used as an example.
- Use a heat gun carefully to avoid heat damage to the equipment.

Copyright © Huawei Technologies Co., Ltd.

Figure 5-3 Crimping an OT terminal

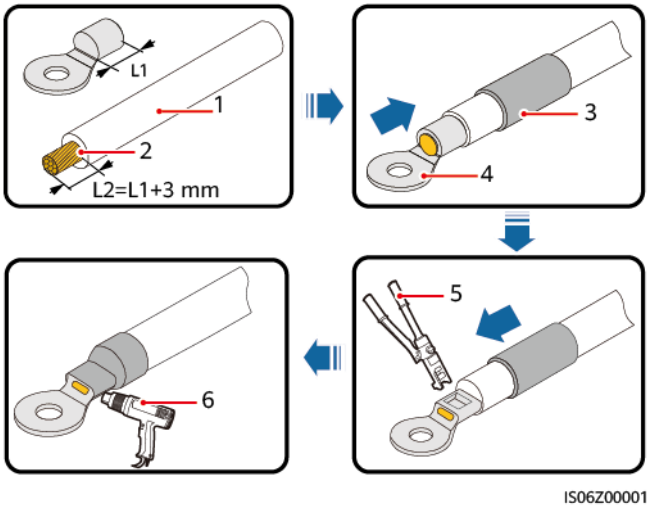

(1) Cable (2) Core wire (3) Heat shrink tubing

(4) OT terminal (5) Hydraulic pliers (6) Heat gun

Figure 5-4 Crimping a DT terminal

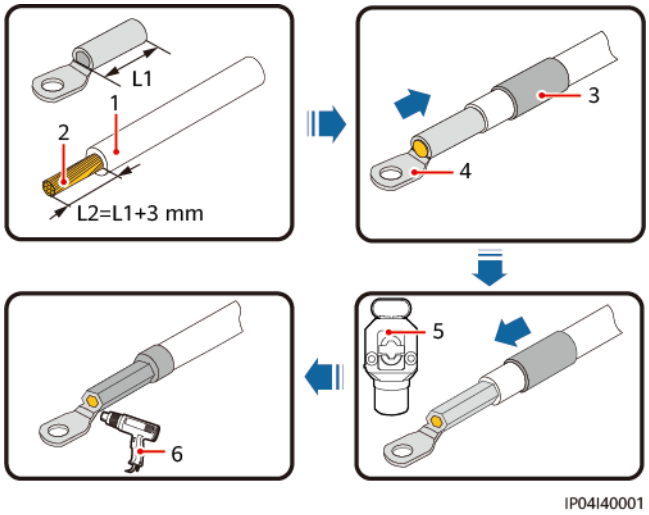

(1) Cable (2) Core wire (3) Heat shrink tubing

(4) DT terminal (5) Hydraulic pliers (6) Heat gun

5.3 Opening the Maintenance Compartment Door

Precautions

NOTICE

- Do not open the host panel cover of the inverter.
- Before opening the maintenance compartment door, ensure that no electrical connections are made for the inverter on the AC or DC side.
- If you need to open the maintenance compartment door in rainy or snowy days, take protective measures to prevent rain or snow entering the maintenance compartment. If unavoidable, do not open the maintenance compartment door.
- Do not leave unused screws in the maintenance compartment.

Procedure

Step 1 Partially loosen the two screws on the maintenance compartment door.

Step 2 Open the maintenance compartment door and install a support bar.

Figure 5-5 Opening the maintenance compartment door

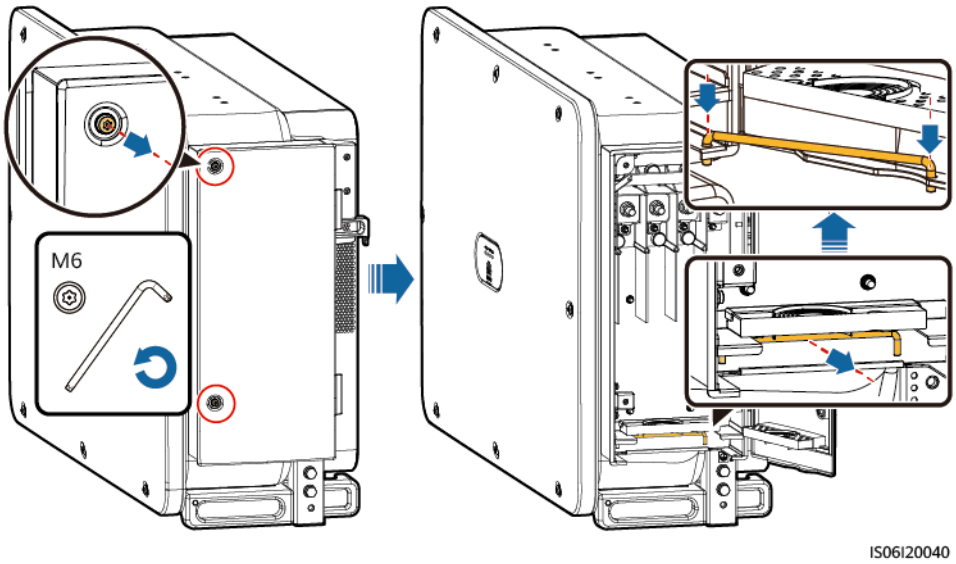

Step 3 Remove the accessories that are bound in the maintenance compartment for future use.

NOTE

For some models, a three-hole rubber plug is bound in the maintenance compartment. After removing the rubber plug, save it properly for future use.

Copyright © Huawei Technologies Co., Ltd.

Figure 5-6 Removing the accessories from the maintenance compartment

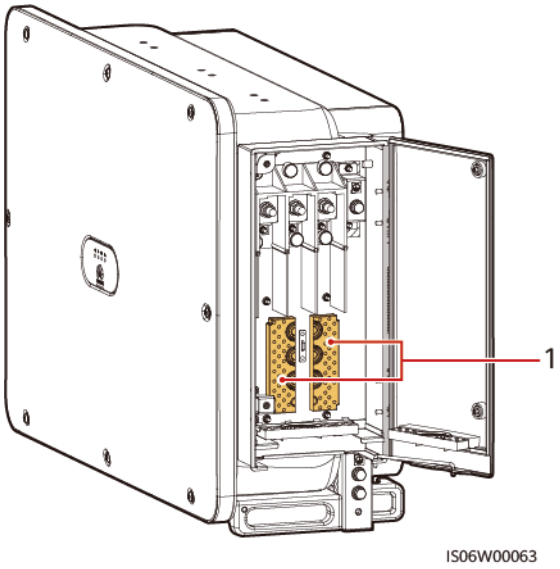

(1) Crimping modules

----End

5.4 (Optional) Replacing the Crimping Module

Procedure

NOTE

If the AC output power cable has a single core, replace the crimping module.

Step 1 Replace the crimping module.

Figure 5-7 Replacing the crimping module

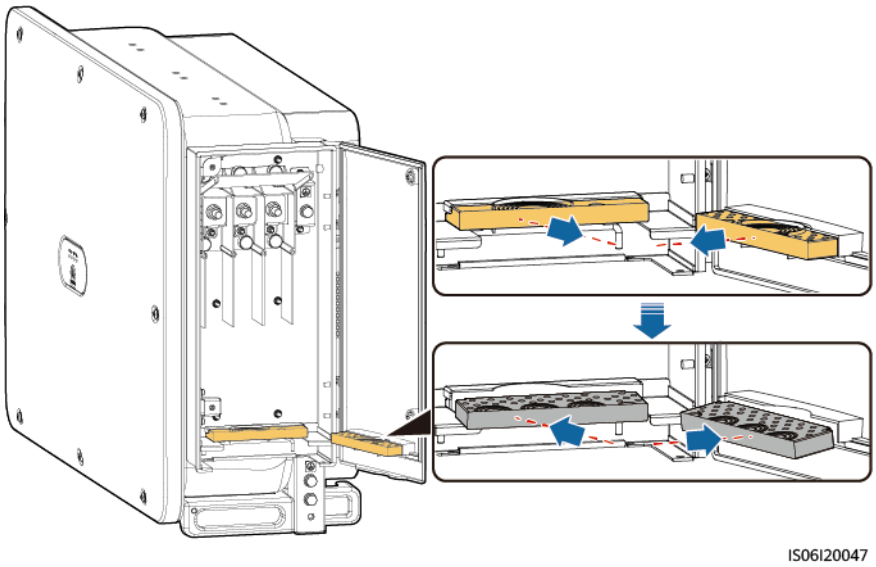

----End

5.5 (Optional) Installing the Power Cable of the Tracking System

Precautions

NOTICE

- A switch-disconnector-fuse or fuse-switch-disconnector with a voltage of no less than 800 V, current of 16 A, and protection type of gM needs to be installed between the inverter and the tracker controller for protection.
- The cable between the wiring terminal on the power cable and the switch-disconnector-fuse or fuse-switch-disconnector should be less than or equal to 2.5 m.
- Connect the power cable of the tracking system before the AC output power cable. Otherwise, reworking will be caused.

Cable Specifications

Recommended: dual-layer three-core outdoor copper cable with a conductor cross-sectional area of 10 mm^2 and a cable outer diameter of 15–18 mm.

Procedure

Step 1 Connect the power cable of the tracking system to the terminal block.

Figure 5-8 Cable connection

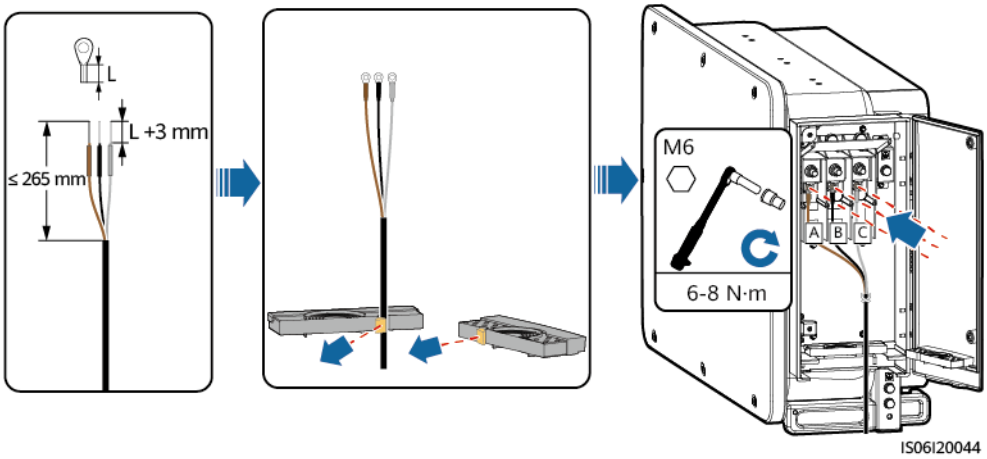

----End

Copyright © Huawei Technologies Co., Ltd.

5.6 Connecting the AC Output Power Cable

Precautions

A three-phase AC switch should be installed on the AC side of the inverter. To ensure that the inverter can safely disconnect itself from the power grid when an exception occurs, select a proper overcurrent protection device in compliance with local power distribution regulations.

WARNING

- Do not connect loads between an inverter and an AC switch that directly connects to the inverter. Otherwise, the switch may trip by mistake.
- If an AC switch is used with specifications beyond local standards, regulations, or the Company's recommendations, the switch may fail to turn off in a timely manner in case of exceptions, causing serious faults.

CAUTION

Each inverter shall be equipped with an AC output switch. Multiple inverters shall not connect to the same AC switch.

The inverter is integrated with a comprehensive residual current detection unit to distinguish fault current from residual current. Upon detecting that the residual current exceeds the threshold, the inverter immediately disconnects from the power grid.

Cable Connection Precautions

NOTICE

- The cable outer diameter can be measured using the ruler sticker in the maintenance compartment.
- Ensure that the cable jacket is in the maintenance compartment.
- Ensure that the AC output power cable is secured. Failing to do so may cause the solar inverter to malfunction or damage to its terminal block by issues such as overheating.

- The ground point on the enclosure is preferred to connect to the PE cable for the inverter.
- The PE point in the maintenance compartment is used for connecting to the PE cable included in the multi-core AC power cable.
- There are two ground points on the chassis shell and you only need either of them.

 Copyright © Huawei Technologies Co., Ltd.

- It is recommended that the PE cable of the inverter be connected to a nearby ground point. For a system with multiple inverters connected in parallel, connect the ground points of all inverters to ensure equipotential connections to ground cables.

Cable Specifications

- If you connect a ground cable to the ground point on the chassis shell, you are advised to use a three-core (L1, L2, and L3) outdoor cable or three single-core outdoor cables.
- If you connect a ground cable to the ground point in the maintenance compartment, you are advised to use a four-core (L1, L2, L3, and PE) outdoor cable.
- You need to prepare the OT or DT terminal that matches the cable.

Table 5-1 AC power cable specifications

Cable Type	Conductor Cross-Sectional Area	Cable Outer Diameter	OT/DT Terminal
Copper-core cable	50–240 mm^2	• Multi-core cable: 24–66 mm • Single-core cable: 14–32 mm[1]	M10 (PE) M12 (L1/L2/L3)
Copper-clad aluminum cable and aluminum alloy cable	• Multi-core cable: 70–240 mm^2 • Single-core cable: 70–240 mm^2[2]		
Note [1]: For some models, the outer diameter of a single-core cable ranges from 14 mm to 36 mm based on the label in the maintenance compartment. Note [2]: For some models, when the OT/DT terminal is crimped as shown in the following figure and the rubber baffle plate of the AC wiring terminal is 112 mm, the maximum conductor cross-sectional area of the single-core cable can be 400 mm^2.			

Figure 5-9 Specifications of the Crimped OT/DT Terminal

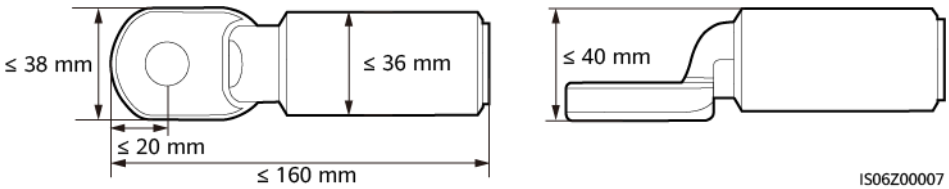

Figure 5-10 Specification of the Rubber Baffle Plate

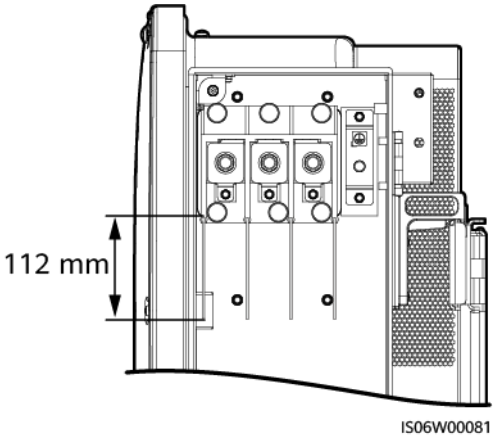

NOTE

- The cable diameter must comply with local cable standards. The factors that affect cable selection include the rated current, cable type, routing mode, ambient temperature, and maximum expected line loss.
- When the MBUS is used for communication, it is recommended that the multi-wire cable be used. The maximum communication distance is 1000 m. If other types of AC power cables are used, contact Huawei technical support.

Table 5-2 PE cable specifications

Conductor Cross-Sectional Area S of the AC Power Cable (Unit: mm^2)	Conductor Cross-Sectional Area S_P of the PE Cable (Unit: mm^2)	OT/DT Terminal
S > 35	$S_P \geq S/2$	M10
The specifications are valid only if the conductors of the PE cable and AC power cable use the same material. If the materials are different, ensure that the conductor cross-sectional area of the PE cable produces a conductance equivalent to that of the cable specified in this table. The specifications of the PE cable are subject to this table or calculated according to IEC 60364-5-54.		

Connecting the PE Cable

Step 1 Connect the PE cable to the ground point. To enhance the corrosion resistance of a ground terminal, apply silicone grease or paint on it after connecting the PE cable to the ground point on the enclosure.

 Copyright © Huawei Technologies Co., Ltd.

Figure 5-11 Cable connection

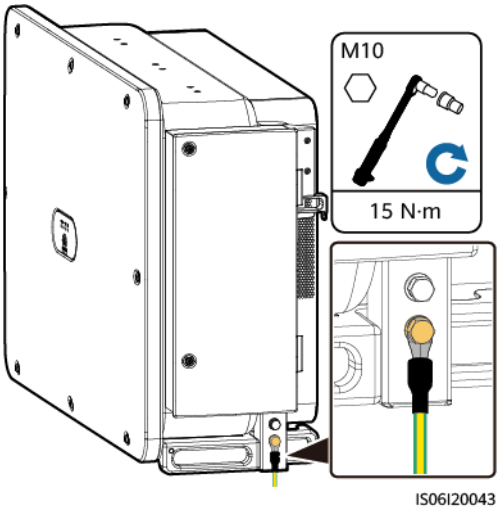

----End

Connecting the AC Output Power Cable (Multi-core)

Step 1 Connect the AC cable to the terminal block.

NOTICE

Sufficient slack should be provided in the PE cable to ensure that the last cable bearing the force is the PE cable when the AC output power cable bears pulling force due to force majeure.

 Copyright © Huawei Technologies Co., Ltd.

Figure 5-12 Cable connection

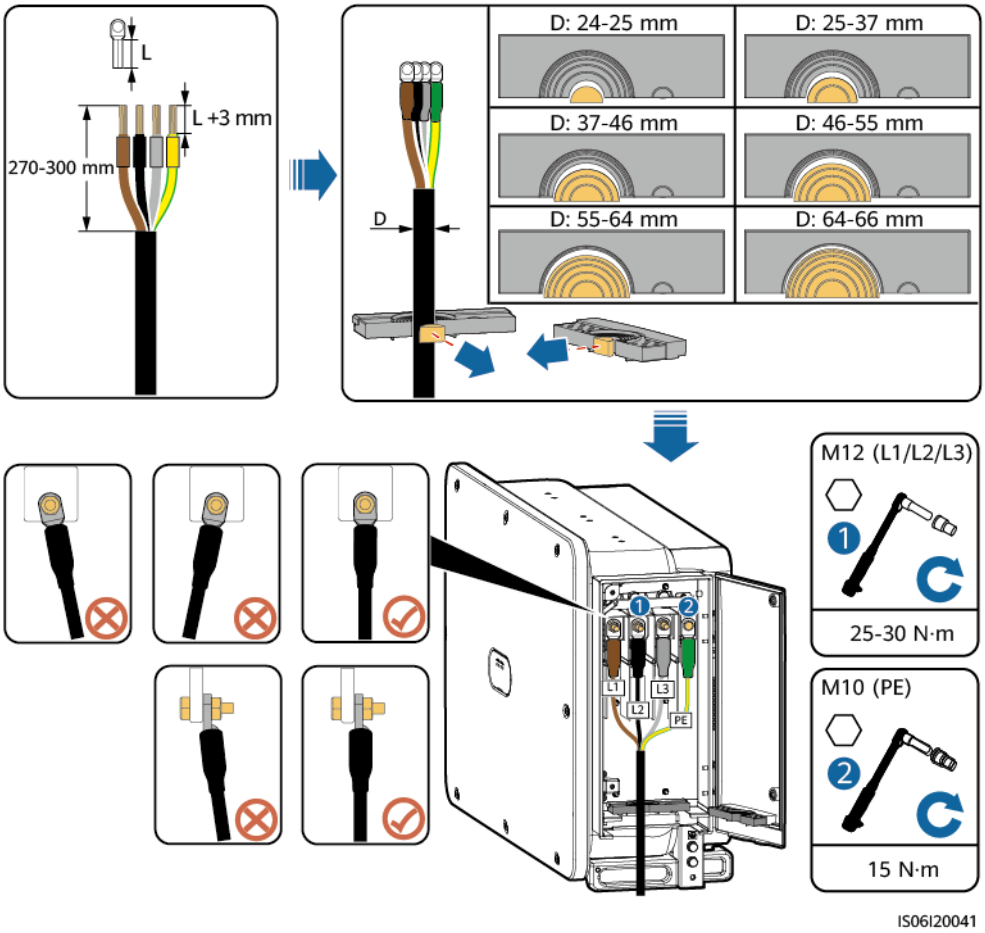

----End

Connecting the AC Output Power Cable (Single-core)

Step 1 Connect the AC cable to the terminal block.

Figure 5-13 Cable connection

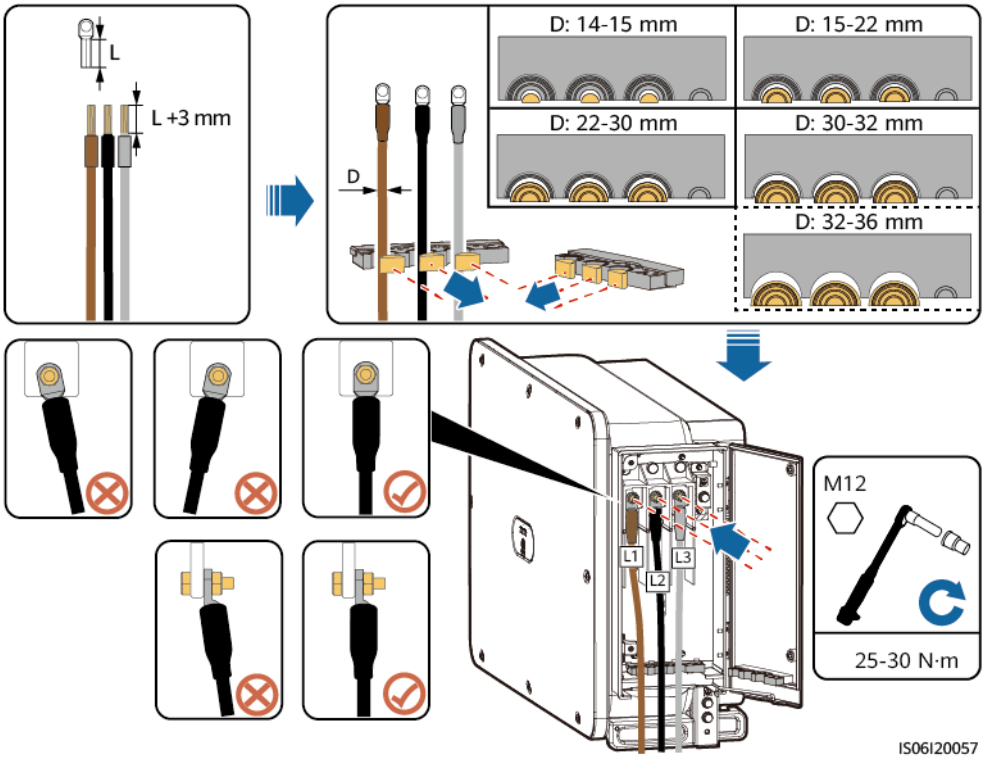

----End

NOTE

The 32–36 mm cable is supported only by some models. Refer to the corresponding label to get the supported size.

Bending Radius

Figure 5-14 Bending Radius

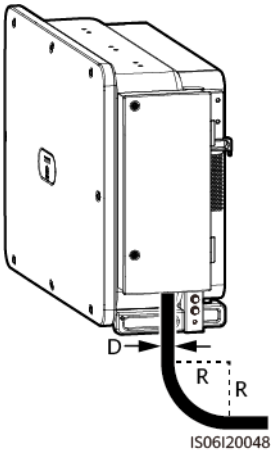

Multi-Core Cable		Single-Core Cable	
Unarmored	Armored	Unarmored	Armored
R ≥ 15D	R ≥ 12D	R ≥ 20D	R ≥ 15D
R indicates the bending radius, and D indicates the outer diameter of the cable.			

NOTE

The AC power cable must be routed vertically into the maintenance compartment.

5.7 Connecting DC Input Power Cables

Precautions

DANGER

- Before connecting the DC input power cables, ensure that the DC voltage is within the safe range (lower than 60 V DC) and that the three DC switches (**DC SWITCH**) on the inverter are **OFF**. Otherwise, the high voltage may result in electric shocks.
- When the inverter operates in grid-tied mode, do not perform maintenance or operations on the DC input power cables, such as connecting or disconnecting a PV string or a PV module in the PV string. Otherwise, electric shocks or arcing (which may cause fire) may occur.

WARNING

Ensure that the following conditions are met. Otherwise, the inverter may be damaged or even a fire may occur.

- The maximum open-circuit voltage of each PV string must be lower than or equal to 1500 V DC under any circumstances.
- The polarities of electrical connections must be correct on the DC input side. The positive and negative terminals of a PV string must be connected to corresponding positive and negative DC input terminals of the inverter.

WARNING

During the installation of PV strings and the inverter, the positive or negative terminals of PV strings may be short-circuited to ground if the power cables are not properly installed or routed. In this case, an AC or DC short circuit may occur and damage the inverter. The resulting device damage is not covered under any warranty.

 Copyright © Huawei Technologies Co., Ltd.

NOTICE

- Ensure that the PV module output is well insulated to ground.
- The PV strings connecting to the same MPPT circuit shall use the same model and quantity of PV modules.
- The inverter does not support full parallel connection for PV strings (full parallel connection: PV strings connect to one another in parallel outside the inverter and then connect to it separately).

Terminal Description

The inverter provides 18 DC input terminals, which are controlled by its three DC switches. DC SWITCH 1 controls DC input terminals 1–6, DC SWITCH 2 controls DC input terminals 7–12, and DC SWITCH 3 controls DC input terminals 13–18.

Figure 5-15 DC terminals

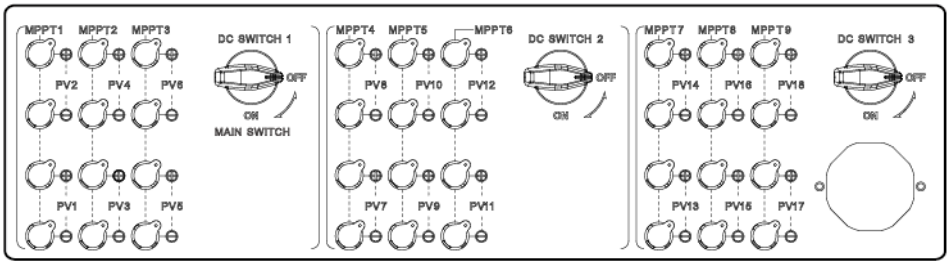

Requirements for selecting DC input terminals:

1. Evenly distribute the DC input power cables on the DC input terminals controlled by the three DC switches.
2. Maximize the number of connected MPPT circuits.

Wiring Description of Y-branch Connectors

NOTICE

- Y-branch connectors can be purchased from Huawei or other manufacturers: If the rated current of the fuse of the Y-branch connector is 15 A, the recommended model is 904095944 (Luxshare) or A040959443039 (Comlink); if the rated current of the fuse of the Y-branch connector is 20 A, the recommended model is 904095945 (Luxshare) or A040959453039 (Comlink).
- When connecting cables to recommended Y-branch connectors, ensure that the connectors to be paired match each other and are from the same manufacturer. Otherwise, the contact resistance of the connectors may exceed the allowed value. In this case, the connectors may be heated and oxidized, which may cause faults.
- Ensure that the locking nuts of all connectors are tightened.
- Do not bind more than three fuse enclosures together. Otherwise, the fuses and their enclosures may be damaged due to overheating. It is recommended that a clearance of 10 mm or more be reserved between fuse enclosures. You are advised not to bind the fuse enclosures with other heat emitting conductors.
- Do not place the Y-branch connector harness on the ground. A safe distance must be reserved between the Y-branch connector harness and the ground to avoid impact caused by water on the ground.
- It is recommended that the Y-branch connectors be connected from the PV string side and tied to the PV trackers.
- The DC input terminals of the inverter are prone to damage under stress. When Y-branch connectors are connected to the inverter, the connectors must be bound and secured to reduce the stress on DC input terminals. For details, see **A Securing Y-Branch Connectors**.

Wiring rules:

1. The PV+ on the string side must be connected to the PV+ on the inverter side, and the PV– on the string side must be connected to the PV– on the inverter side.
2. Y-branch connectors shall be evenly distributed on the DC input terminals controlled by the three DC switches.

Number of Y-branch Connector Sets	Recommended MPPT to Be Connected	Number of Y-branch Connector Sets	Recommended MPPT to Be Connected
1	MPPT2	2	MPPT2, MPPT8
3	MPPT2, MPPT5, MPPT8	4	MPPT1, MPPT2, MPPT5, MPPT8
5	MPPT1, MPPT2, MPPT5, MPPT7, MPPT8	6	MPPT1, MPPT2, MPPT4, MPPT5, MPPT7, MPPT8

 Copyright © Huawei Technologies Co., Ltd.

Number of Y-branch Connector Sets	Recommended MPPT to Be Connected	Number of Y-branch Connector Sets	Recommended MPPT to Be Connected
7	MPPT1, MPPT2, MPPT3, MPPT4, MPPT5, MPPT7, MPPT8	8	MPPT1, MPPT2, MPPT3, MPPT4, MPPT5, MPPT7, MPPT8, MPPT9
9	MPPT1, MPPT2, MPPT3, MPPT4, MPPT5, MPPT6, MPPT7, MPPT8, MPPT9	-	-

Figure 5-16 Y-branch connector solution

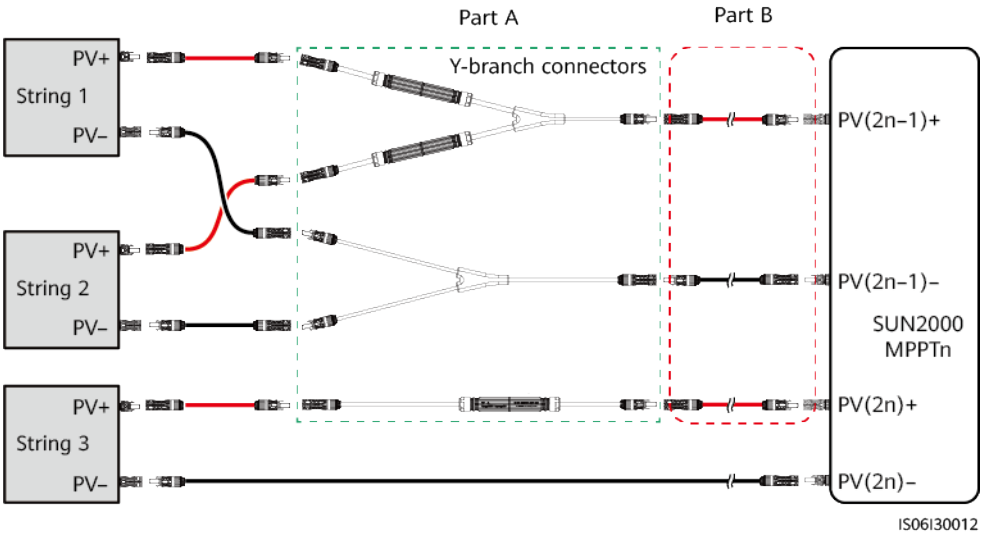

Scenario	Model of Y-branch Connector (Part A)	Connection Description
Connecting Y-branch connectors to the PV strings (recommended)	All models	Use the DC terminals delivered with the inverter to connect part B to the inverter.

Scenario	Model of Y-branch Connector (Part A)	Connection Description
Connecting Y-branch connectors to the inverter	Models recommended by Huawei	Part A can be directly connected to the inverter, and part B is not needed.
	Models other than those recommended by Huawei	To ensure that the terminals of part A match the DC terminals of the inverter, part B is needed to connect part A to the inverter. Use the DC terminals delivered with the inverter to connect part B to the inverter.

Cable Specifications

Cable Type	Conductor Cross-Sectional Area (Unit: mm^2)	Cable Outer Diameter (Unit: mm)
1500 V copper multi-strand twisted PV cable	4–6	4.7–6.4

NOTICE

- Cables with high rigidity, such as armored cables, are not recommended, because poor contact may be caused by the bending of cables.
- Do not connect aluminum or aluminum alloy DC power cables directly to the DC terminals of the inverter.
- The 1500 V PV cables must comply with IEC 62930 or EN 50618.

Procedure

NOTICE

- Use the MC4 EVO2 PV connectors delivered with the inverter. If the PV connectors are lost or damaged, purchase the connectors of the same model. The device damage caused by incompatible PV connectors is not covered under any warranty.
- For models of the crimping tool and removal wrench, use the recommended model or contact the Staubli vendor.

Step 1 Connect DC input power cables.

 Copyright © Huawei Technologies Co., Ltd.

NOTICE

- The DC voltage measurement range of the multimeter must be at least 1500 V.
- If the voltage is a negative value, the DC input polarity is incorrect. Rectify the connection.
- If the voltage is greater than 1500 V, too many PV modules are connected to the same string. Remove some PV modules.
- Connect the connectors on the PV strings to the connectors on the inverter, and pull back the connectors on the PV strings along the axial direction to check whether the connectors are securely installed.
- Ensure that the connectors are properly connected. Any connector damage due to improper connection is not covered under any warranty.

Figure 5-17 Cable connection

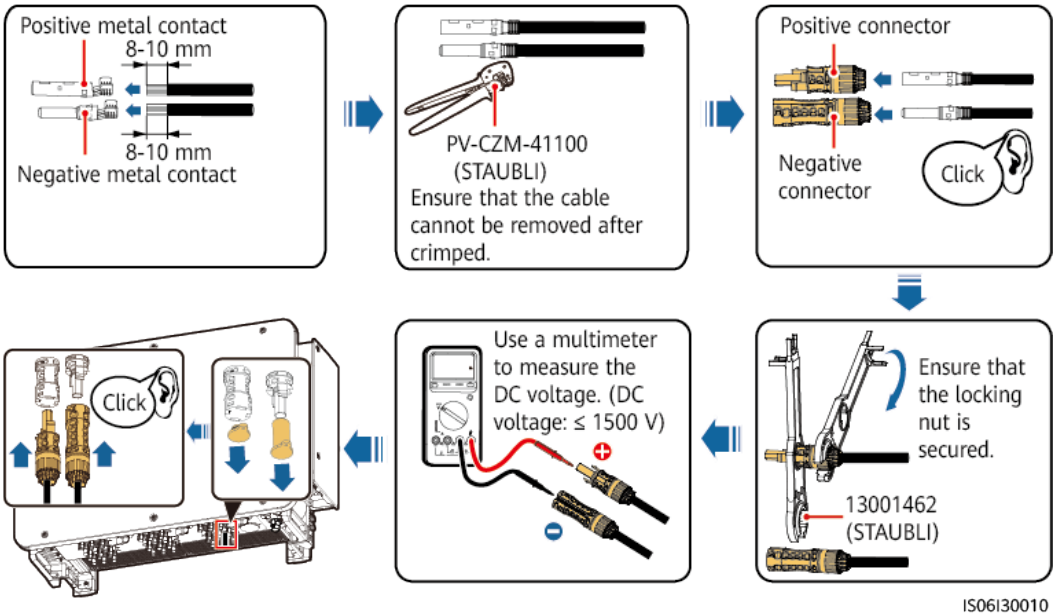

Figure 5-18 Connector connection

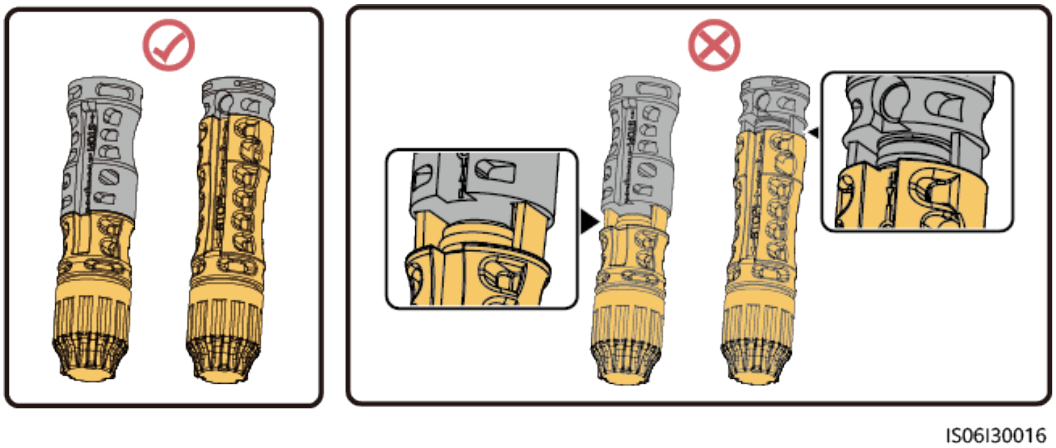

Copyright © Huawei Technologies Co., Ltd.

NOTICE

When installing DC input power cables, leave at least 150 mm of slack. The axial tension on PV connectors must not exceed 80 N. Radial stress or torque must not be generated on PV connectors.

Figure 5-19 DC input power cabling requirement

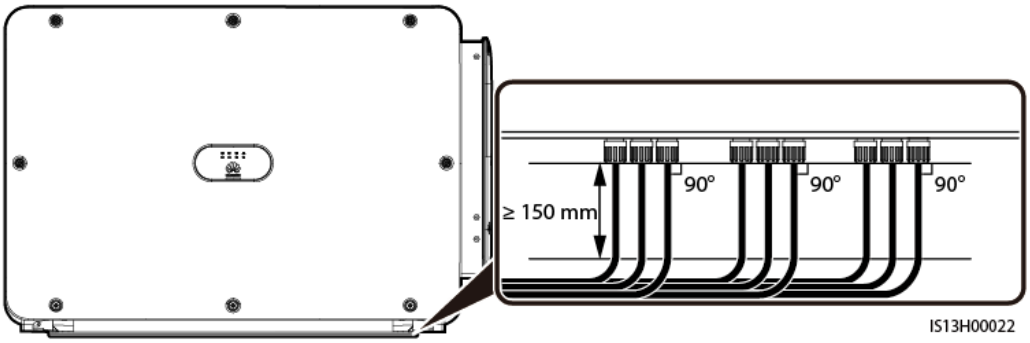

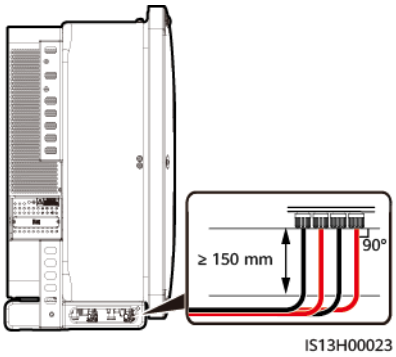

----End

5.8 Installing the Communications Cable

Precautions

When routing communications cables, separate communications cables from power cables to prevent communication from being affected.

Pin Definitions of Communications Ports

Figure 5-20 Communications ports

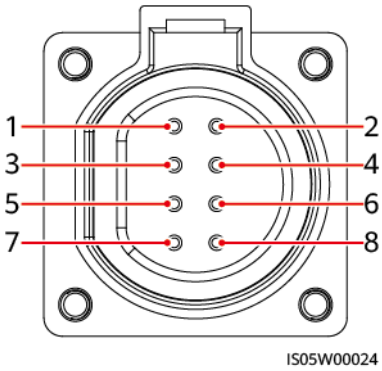

Port	Pin	Definition	Pin	Definition	Description
RS485-1	1	RS485A IN, RS485 differential signal+	2	RS485A OUT, RS485 differential signal+	Used for cascading inverters or connecting to devices such as the SmartLogger.
	3	RS485B IN, RS485 differential signal–	4	RS485B OUT, RS485 differential signal–	
PE	5	PE, shielding ground	6	PE, shielding ground	-
RS485-2	7	RS485A, RS485 differential signal+	8	RS485B, RS485 differential signal–	Used for connecting to RS485 slave devices.

Procedure

Step 1 Install the communications cable.

 Copyright © Huawei Technologies Co., Ltd.

Figure 5-21 Cable connection (4–8 mm four-hole rubber plug)

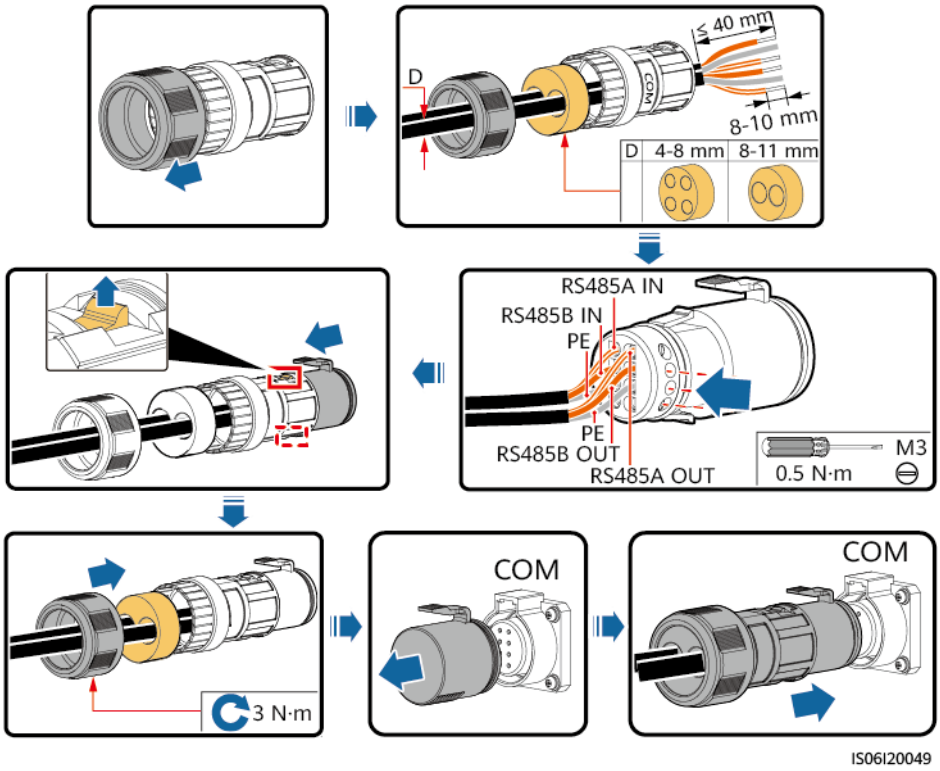

NOTICE

Block unused cable holes using plugs and tighten cable glands.

Figure 5-22 Cable connection (4–8 mm two-hole rubber plug)

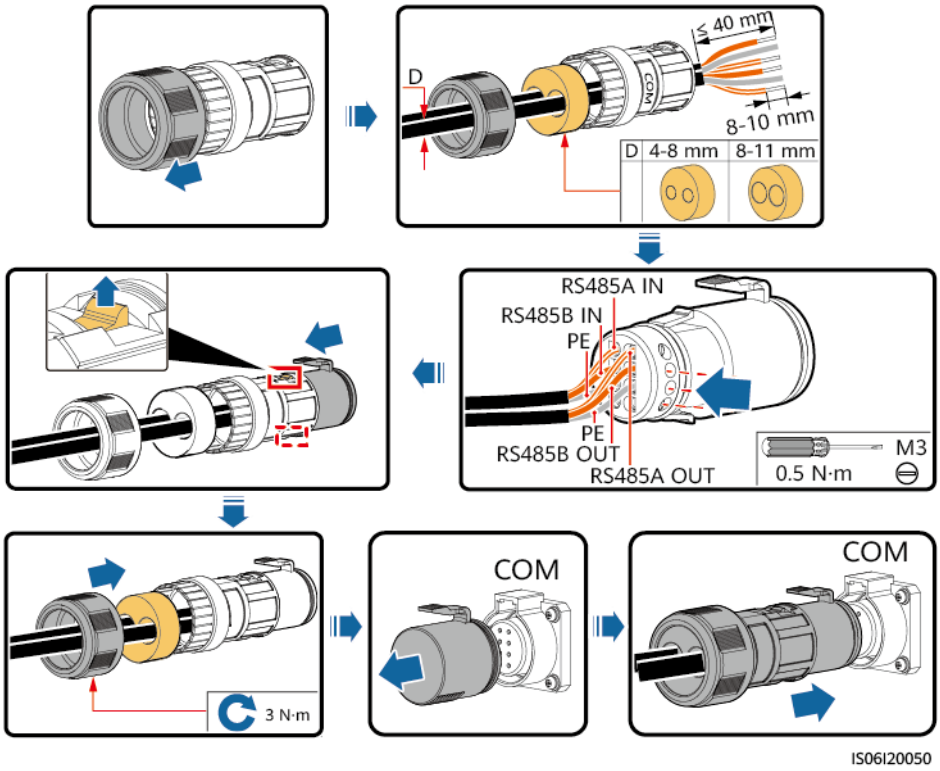

NOTICE

- If three communications cables are to be connected, use the three-hole rubber plug that is bound in the maintenance compartment.
- Block unused cable holes using plugs and tighten cable glands.

----End

5.9 Closing the Maintenance Compartment Door

Procedure

Step 1 Adjust the support bar, close the maintenance compartment door and tighten the two screws on the door.

Figure 5-23 Closing the door

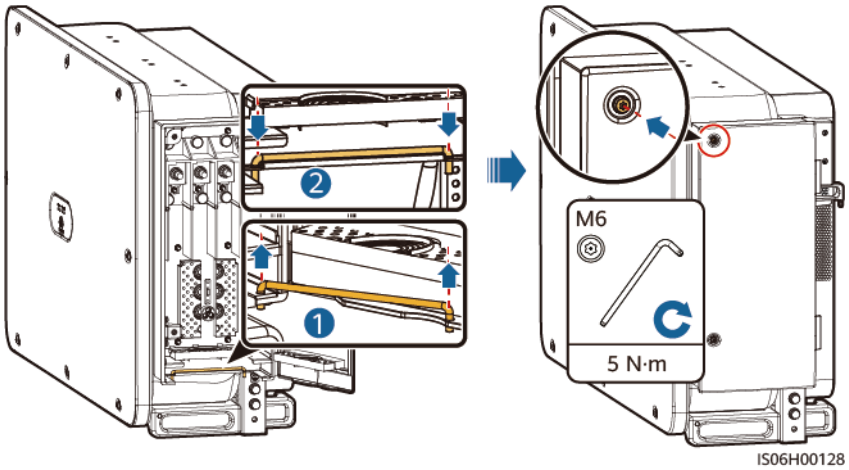

----End

6 System Commissioning

6.1 Checking Before Power-On

1. Check that the inverter is installed correctly and securely.
2. Check that the DC switches and downstream AC output switch are OFF.
3. Check that all ground cables are connected securely and reliably.
4. Check that all AC output power cables are connected correctly and securely, without open circuits or short circuits.
5. Check that all DC input power cables are connected correctly and securely, without open circuits or short circuits.
6. Check that the communications cables are connected correctly and securely.
7. Check that the maintenance compartment interior is clean and tidy, without foreign matter.
8. Check that the maintenance compartment door is closed and that the door screws are tightened.
9. If there are DC input terminals that are not connected to PV strings, use sealing plugs with snap-fits (models: CT75A-FJB6/HY024-FHG-3 and CT75AFJB5/HY024-FHG-4) to seal the terminals. Device damage caused by the absence of sealing plugs is not covered by warranty.

   Figure 6-1 Sealing plugs with snap-fits

   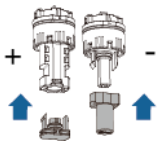

10. Check that idle USB ports are plugged with waterproof plugs.

6.2 System Power-On

Precautions

DANGER

- Wear personal protective equipment and use dedicated insulated tools to avoid electric shocks or short circuits.

WARNING

When LED2 is steady green (meaning that the inverter is grid-tied), do not turn on any DC switch. Otherwise, the inverter may be damaged because the insulation resistance is not detected.

NOTICE

- Before the equipment is put into operation for the first time, ensure that the parameters are set correctly by professional personnel. Incorrect parameter settings may result in noncompliance with local grid connection requirements and affect the normal operations of the equipment.
- Before turning on the AC switch between the inverter and the power grid, check that the AC voltage is within the specified range using a multimeter.
- If the solar inverter has not been running for more than half a year after being mounted, it must be checked and tested by professionals before being put into operation.
- Do not turn the DC switch to the unloaded position .
- When the system is powered on or running, do not place obstacles (such as cables) to block the rotation of the handle or manually hold the handle. Otherwise, the DC switch cannot be automatically disconnected.

Procedure

Step 1 Turn on the AC switch between the inverter and the grid.

NOTICE

If you perform **Step 2** before **Step 1**, the inverter reports a fault about abnormal shutdown. The inverter can start normally after the fault is automatically cleared.

Step 2 Set DC SWITCH 1 (MAIN SWITCH) at the bottom of the SUN2000 chassis to ON. When you hear a click sound, the switch is ON.

 Copyright © Huawei Technologies Co., Ltd.

Step 3 Check the status of LED 1. If it is steady green, set DC SWITCH 2 and DC SWITCH 3 to ON.

----End

 Copyright © Huawei Technologies Co., Ltd.

7 Man-Machine Interactions

7.1 Operations with the App

7.1.1 App Introduction

Functions

- The FusionSolar app is recommended when the SUN2000 is connected to the FusionSolar hosting cloud. The SUN2000 app is recommended when the SUN2000 is connected to other management systems.
- The SUN2000 or FusionSolar app (app for short) is a mobile phone app that communicates with the SUN2000 over a WLAN/Bluetooth module or a USB data cable to allow for querying alarms, setting parameters, and performing routine maintenance as an easy-to-use maintenance platform.

Connection Mode

After the DC or AC side of the SUN2000 is powered on, you can connect the app to it through a WLAN module, a Bluetooth module or a USB data cable.

NOTICE

- Over a WLAN module: The USB-Adapter2000-C WLAN module is supported.
- Over a Bluetooth module: The USB-Adapter2000-B Bluetooth module is supported.
- Over a USB data cable: The USB 2.0 port is supported. Use the USB data cable delivered with the mobile phone.
- Mobile phone operating system: Android 4.0 or later.
- Recommended phone brands: Huawei and Samsung.

 Copyright © Huawei Technologies Co., Ltd.

Figure 7-1 Connection over a WLAN module or a Bluetooth module

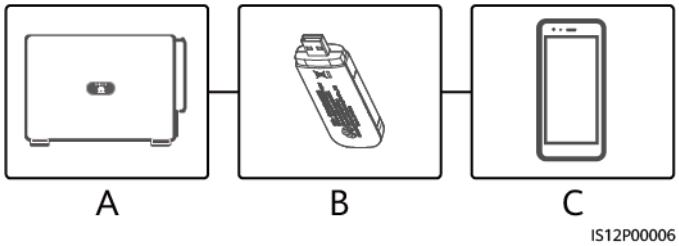

(A) SUN2000 (B) WLAN module or Bluetooth module (C) Mobile phone

Figure 7-2 Connection over a USB data cable

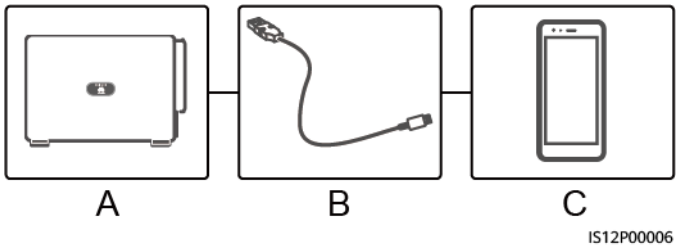

(A) SUN2000 (B) USB data cable (C) Mobile phone

NOTICE

- When you use the SUN2000 app to set parameters for the inverter, setting items on certain parameter setting screens are not displayed if the AC switch between the inverter and the power grid is turned on but the three DC switches on the inverter are not in the ON position. Switch the three DC switches to the ON position and then reset relevant parameters.
- If you change the grid code, some parameters may be restored to factory defaults. After the grid code is changed, check whether the previously set parameters are affected.
- Delivering a reset, factory reset, shutdown, or upgrade command to the solar inverters may cause power grid connection failure, which affects the energy yield.
- Only professionals are allowed to set the grid parameters, protection parameters, feature parameters, and power adjustment parameters of the solar inverters. If the grid parameters, protection parameters, and feature parameters are incorrectly set, the solar inverters may not connect to the power grid. If the power adjustment parameters are incorrectly set, the solar inverters may not connect to the power grid as required. In these cases, the energy yield will be affected.

NOTE

- Configurable parameters vary depending on the grid code. The actual screen may vary.
- The parameter names, value ranges, and default values are subject to change. The actual display may vary.

7.1.2 Downloading and Installing the App

- FusionSolar app: Scan the QR code and download the latest installation package.
- SUN2000 app: Log in to Huawei AppGallery, search for **SUN2000**, and download the app installation package. You can also scan the QR code to download the installation package.

QR code:

FusionSolar SUN2000 (Android) SUN2000 (iOS)

7.1.3 Logging In to the App

Prerequisites

- The DC or AC side of the SUN2000 has been energized.
- Connection over a WLAN module or a Bluetooth module:
  a. The WLAN module or Bluetooth module is connected to the **USB** port at the bottom of the SUN2000.
  b. The WLAN or Bluetooth function is enabled.
  c. Keep the mobile phone within 5 m from the SUN2000. Otherwise, the communication between them would be affected.
- Connection over a USB cable:
  a. The USB data cable is connected from the USB port at the bottom of the SUN2000 to the port on the mobile phone.
  b. If the USB data cable is successfully connected, the message **Connected to USB Accessory** will pop up on the phone. Otherwise, the cable is not connected.

Procedure

1. Run the app and select a connection mode.

 Copyright © Huawei Technologies Co., Ltd.

NOTE

- The screenshots in this document correspond to the SUN2000 app 3.2.00.013 (Android) and FusionSolar app 5.7.010 (Android).
- When the WLAN connection is used, scan the QR code of the WLAN module to access the login screen.
- When the WLAN connection is used, the initial name of the WLAN hotspot is **Adapter-WLAN module SN**, and the initial password is **Changeme**. Use the initial password upon first power-on and change it immediately after login. To ensure account security, change the password periodically and keep the new password in mind. Not changing the initial password may cause password disclosure. A password left unchanged for a long period of time may be stolen or cracked. If a password is lost, devices cannot be accessed. In these cases, the user is liable for any loss caused to the PV plant.
- When the Bluetooth connection is used, the connected Bluetooth device is named after **last 8 digits of the SN barcode+HWAPP**.
- After you select **Use by default for this USB accessory**, a message that asks you to confirm the USB access will not appear if you log in to the app again without removing the USB data cable.

a. (Scenario in which the SUN2000 is connected to the FusionSolar SmartPVMS) Run the FusionSolar app and access the **Device Commissioning** screen.

 Copyright © Huawei Technologies Co., Ltd.

Figure 7-3 Selecting a connection mode (with network access)

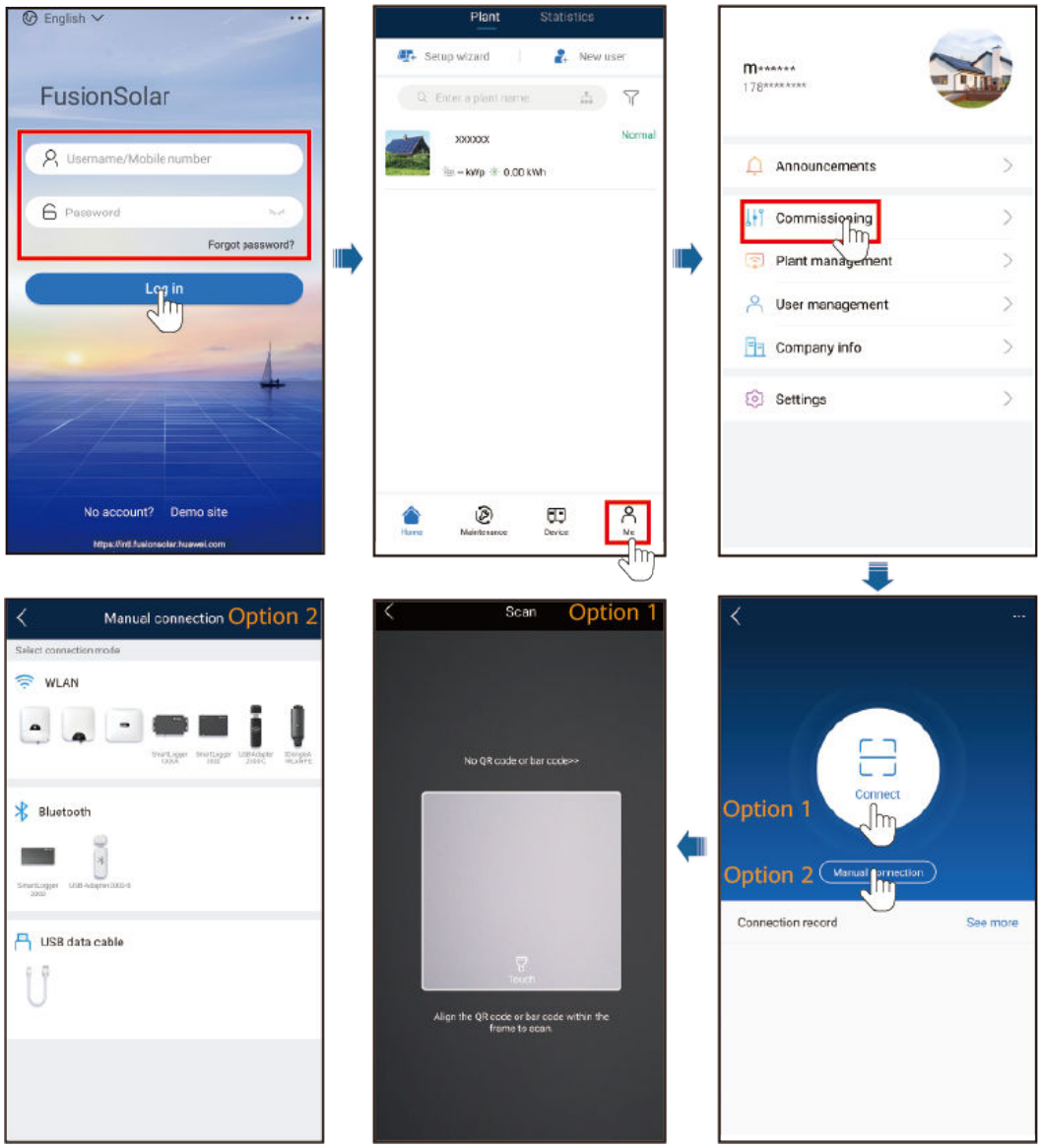

Figure 7-4 Selecting a connection mode (without network access)

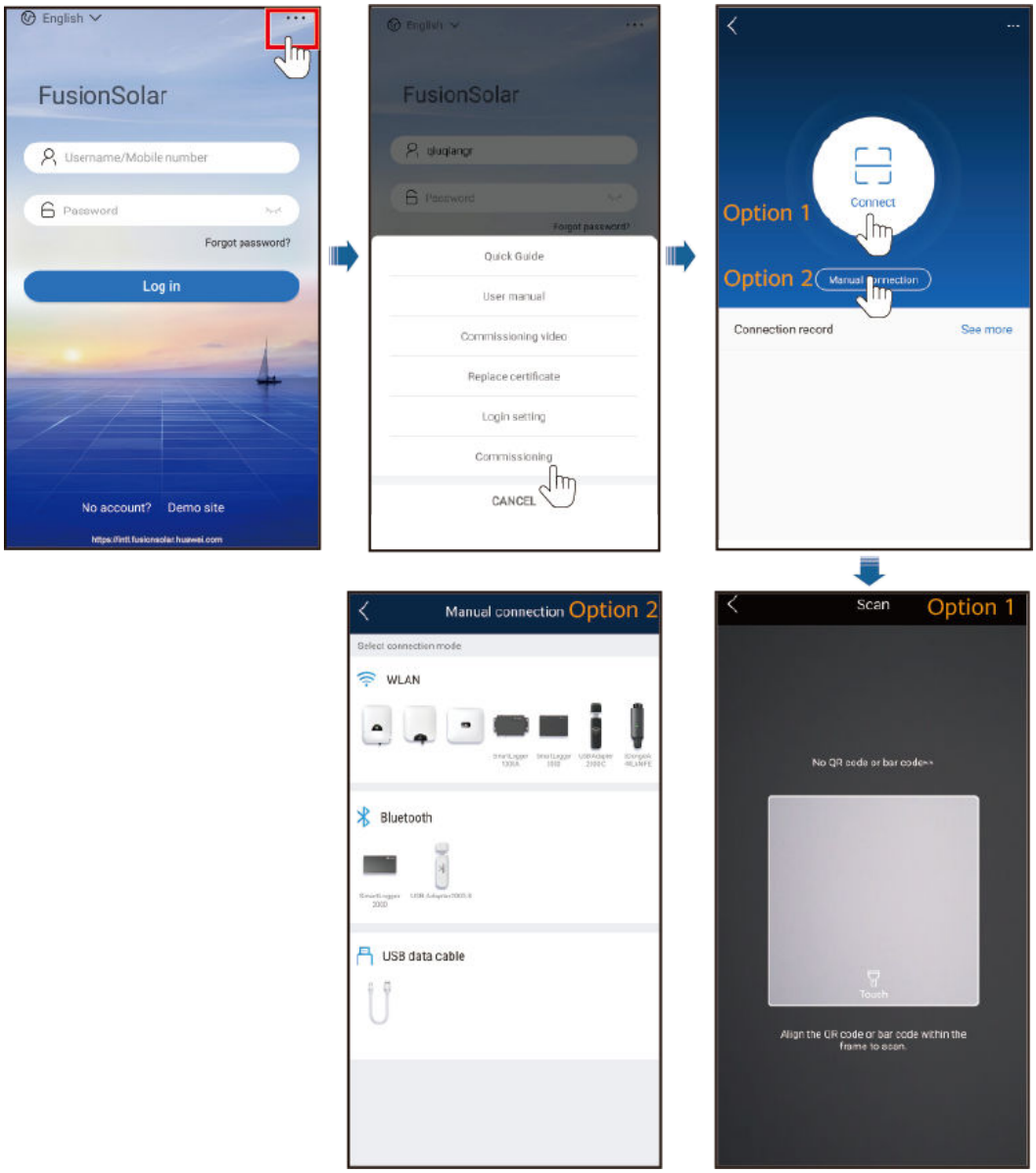

b. (Scenario in which the SUN2000 is connected to other management systems) Run the SUN2000 app and access the operation screen.

Figure 7-5 Selecting a connection method

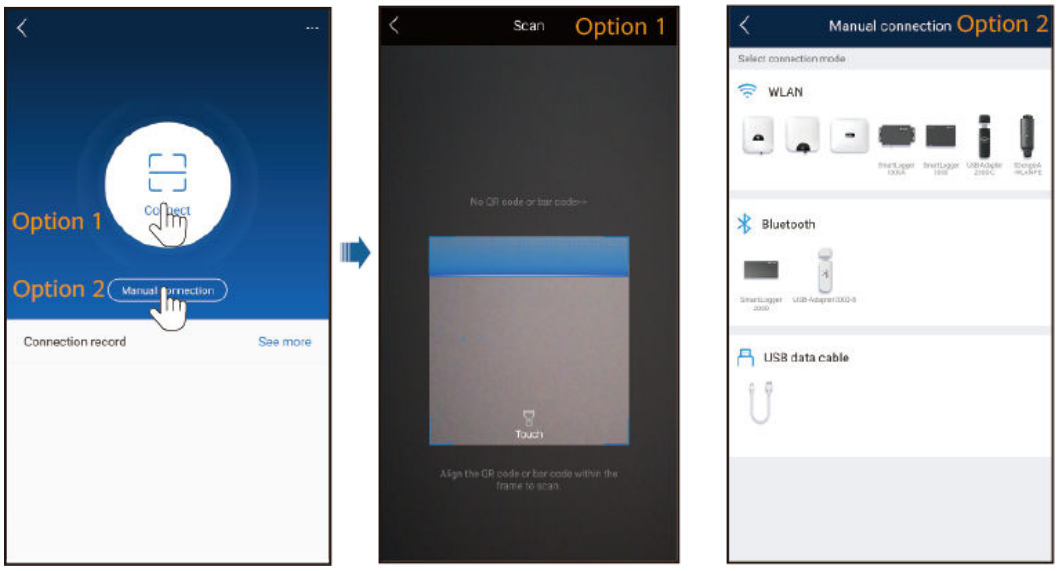

2. Select a login user and enter the login password to access the quick settings screen or the main menu screen.

NOTICE

- The login password is the same as that for the SUN2000 connected to the app and is used only when the SUN2000 connects to the app.
- The initial passwords for **Common User**, **Advanced User**, and **Special User** are all **00000a**.
- Use the initial password upon first power-on and change it immediately after login. To ensure account security, change the password periodically and keep the new password in mind. Not changing the initial password may cause password disclosure. A password left unchanged for a long period of time may be stolen or cracked. If a password is lost, devices cannot be accessed. In these cases, the user is liable for any loss caused to the PV plant.
- During the login, if five consecutive invalid password entries are made (the interval between two consecutive entries is less than 2 minutes), the account will be locked for 10 minutes. The password should consist of six characters.
- If you log in to the app after the device connects to the app for the first time or factory defaults are restored, the quick settings screen will be displayed. Set basic parameters as prompted. If you do not set basic parameters for the inverter on the quick settings screen, the screen is still displayed when you log in to the app next time.
- To set SUN2000 basic parameters on the quick settings screen, switch to **Advanced User**. If you log in as **Common User** or **Special User**, enter the password of the advanced user to access the **Quick Settings** screen.

 Copyright © Huawei Technologies Co., Ltd.

Figure 7-6 Login

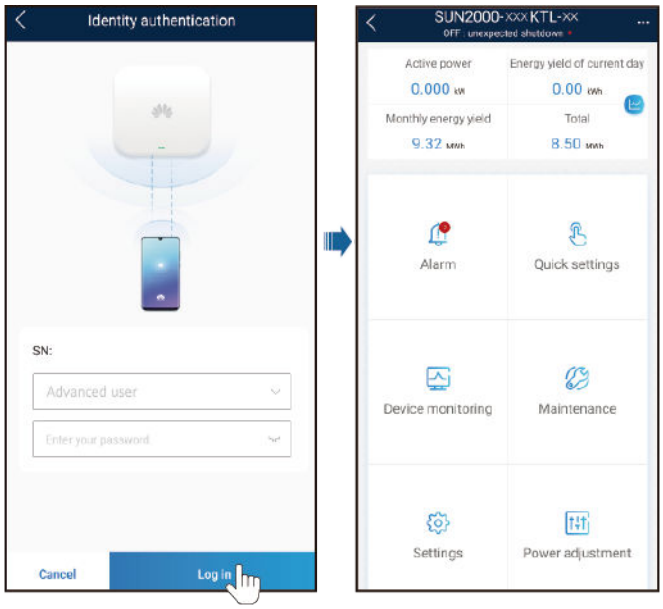

7.1.4 Operations Related to the Advanced User

If you log in to the app as **Advanced User**, you can set grid parameters, protection parameters, and feature parameters for the SUN2000.

7.1.4.1 Setting Grid Parameters

Procedure

Step 1 Choose **Function Menu** > **Settings** > **Grid Parameters** to access the parameters setting screen.

Figure 7-7 Grid parameters (advanced user)

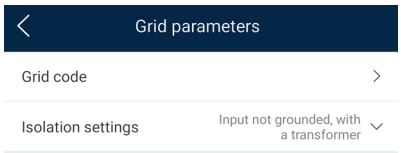

----End

Parameters

No.	Parameter	Description
1	Grid Code	Set this parameter based on the grid code of the country or region where the inverter is used and the inverter application scenario.
2	Isolation settings	Set the working mode of the inverter based on the grounding status at DC side and the connection to the power grid.

7.1.4.2 Setting Protection Parameters

Procedure

Step 1 Choose **Function Menu** > **Settings** > **Protect Parameters** to go to the parameter setting screen.

Figure 7-8 Protection parameters (advanced user)

----End

Parameter

No.	Parameter	Description
1	Insulation resistance protection threshold (MΩ)	To ensure device safety, the inverter detects the insulation resistance of the input side with respect to ground when it starts a self-check. If the detected value is less than the preset value, the inverter does not connect to the grid.

7.1.4.3 Setting Feature Parameters

Procedure

Step 1 Choose **Function Menu** > **Settings** > **Feature Parameters** to access the settings screen.

 Copyright © Huawei Technologies Co., Ltd.

Figure 7-9 Feature parameters (advanced user)

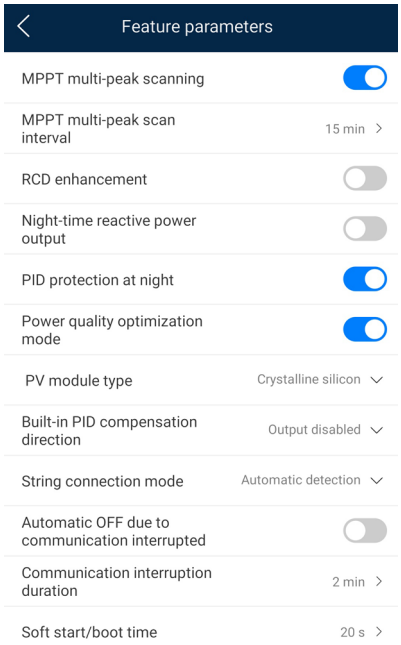

----End

Parameters

No.	Parameter	Description	Remarks
1	MPPT multi-peak scanning	When the inverter is used in scenarios where PV strings are greatly shaded, set this parameter to **Enable**, and then the inverter will perform MPPT scanning at regular intervals to locate the maximum power.	-
2	MPPT multi-peak scan interval (min)	Specifies the MPPT scanning interval.	This parameter is displayed when **MPPT multi-peak scanning** is set to **Enable**.
3	RCD enhancement	RCD refers to the residual current of the inverter to the ground. To ensure device and personal safety, RCD should be limited to the specified value in the standard. If an AC switch with a residual current detection function is installed outside the inverter, this function should be enabled to reduce the residual current generated when the inverter is running, thereby preventing the AC switch from misoperations.	-

 Copyright © Huawei Technologies Co., Ltd.

No.	Parameter	Description	Remarks
4	Night-time reactive power output	In some specific application scenarios, a power grid company requires that the inverter can perform reactive power compensation at night to ensure that the power factor of the local power grid meets requirements.	This parameter is displayed when **Isolation settings** is set to **Input ungrounded, with TF**.
5	PID protection at night	When the inverter outputs reactive power at night and this parameter is set to **Enable**, the inverter will shut down automatically if it detects abnormal status of the PID compensation.	-
6	Power quality optimization mode	If this parameter is set to **Enable**, the inverter output current harmonics will be optimized.	-
7	PV module type	This parameter is used to set different types of PV modules and the shutdown time of the concentration PV module. If the concentration PV modules are shaded, the power drops drastically to 0 and the inverter shuts down. The energy yield would be affected since it takes too long for the power to resume and inverter to restart. The parameter does not need to be set for crystalline silicon and filmy PV modules.	● If this parameter is set to **Crystalline silicon** or **Film**, the inverter automatically detects the power of PV modules when they are shaded and shuts down if the power is too low. ● When concentration PV modules are used: – If this parameter is set to **CPV 1**, the inverter can quickly restart in 60 minutes if the input power of PV modules drops drastically due to shading. – If this parameter is set to **CPV 2**, the inverter can quickly restart in 10 minutes if the input power of PV modules drops drastically due to shading.

 Copyright © Huawei Technologies Co., Ltd.

No.	Parameter	Description	Remarks
8	Built-in PID compensation direction	When the external PID module compensates the PID voltage for the PV system, set **Built-in PID compensation direction** to the actual compensation direction of the PID module so that the inverter can output reactive power at night.	-
9	String connection mode	Specifies the connection mode of PV strings.	• When PV strings connect to the inverter separately (All PV strings separated), there is no need to set this parameter. The inverter can automatically detect the connection mode of the PV strings. • When PV strings connect to one another in parallel outside the inverter and then connect to it independently (All PV strings connected), set this parameter to **All PV strings connected**.
10	Automatic OFF due to communication interrupted	The standards of certain countries and regions require that the inverter must shut down after the communication is interrupted for a certain time.	If **Automatic OFF due to communication interrupted** is set to **Enable** and the inverter communication is interrupted for a specified time (set by **Communication interruption duration**), the inverter will automatically shut down.
11	Automatic ON due to communication resumed	If this parameter is set to **Enable**, the inverter automatically starts after communication recovers. If this parameter is set to **Disable**, the inverter needs to be started manually after communication recovers.	This parameter is displayed when **Automatic OFF due to communication interrupted** is set to **Enable**.
12	Communication interruption duration (min)	Specifies the duration for determining communication interruption. Used for automatic shutdown for protection in case of communication interruption.	-
13	Soft start/boot time (s)	Specifies the duration for the power to gradually increase when the inverter starts.	-

 Copyright © Huawei Technologies Co., Ltd.

No.	Parameter	Description	Remarks
14	Shutdown gradient (%/s)	Specifies the power change speed when the inverter shuts down.	-
15	Night-time hibernation	The inverter monitors PV strings at night. If this parameter is set to **Enable**, the monitoring function of the inverter will hibernate at night to reduce power consumption.	-
16	MBUS communication	For inverters that support RS485 communication and MBUS communication, you are advised to set this parameter to **Disable** to reduce power consumption.	-
17	Delay upgrade	This parameter is mainly used in the upgrade scenarios where the PV power supply is disconnected at night due to no sunlight or unstable at dawn or dusk due to poor sunlight.	After the inverter starts to upgrade, if **Delay upgrade** is set to **Enable**, the upgrade package is loaded first. After the PV power supply recovers and the activation conditions are met, the inverter automatically activates the upgrade.
18	RS485-2 communication	If this parameter is set to **Enable**, the RS485-2 port can be used. If the port is not used, you are advised to set this parameter to **Disable** to reduce power consumption.	-
19	Duration for determining short-time grid disconnection (ms)	The standards of certain countries and regions require that the inverter should not disconnect from the power grid if the power grid experiences a short-time failure. After the fault is rectified, the inverter output power needs to be quickly restored.	-

7.1.5 Operations Related to the Special User

If you log in to the app as **Special User**, you can set grid parameters, protection parameters, feature parameters, and power adjustment parameters for the SUN2000.

 Copyright © Huawei Technologies Co., Ltd.

7.1.5.1 Setting Grid Parameters

Procedure

Step 1 Choose **Function Menu** > **Settings** > **Grid Parameters** to access the parameters setting screen.

Figure 7-10 Power grid parameters (special user)

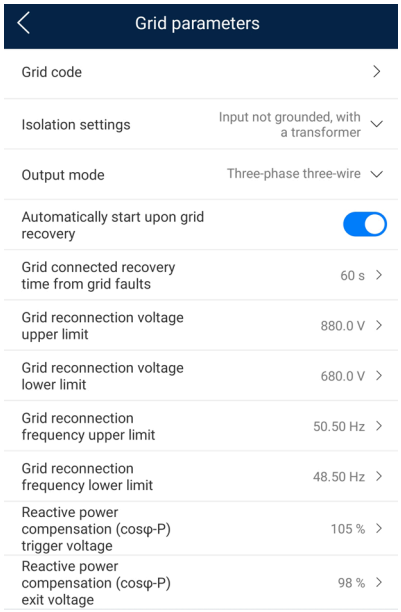

----End

Parameters

No.	Parameter	Description
1	Grid Code	Set this parameter based on the grid code of the country or region where the inverter is used and the inverter application scenario.
2	Isolation settings	Set the working mode of the inverter based on the grounding status at DC side and the connection to the power grid.
3	Output mode	Specifies whether the inverter output has a neutral wire based on the application scenario.
4	Automatically start upon grid recovery	Specifies whether to allow the inverter to automatically start after the power grid recovers.
5	Grid connected recovery time from grid faults (s)	Specifies the time after which the inverter begins restarting after the power grid recovers.

 Copyright © Huawei Technologies Co., Ltd.

No.	Parameter	Description
6	Grid reconnection voltage upper limit (V)	The standards of certain countries and regions require that after the inverter shuts down for protection due to a fault, if the power grid voltage is higher than **Grid reconnection voltage upper limit**, the inverter is not allowed to reconnect to the grid.
7	Grid reconnection voltage lower limit (V)	The standards of certain countries and regions require that after the inverter shuts down for protection due to a fault, if the power grid voltage is lower than **Grid reconnection voltage lower limit**, the inverter is not allowed to reconnect to the grid.
8	Grid reconnection frequency upper limit (Hz)	The standards of certain countries and regions require that after the inverter shuts down for protection due to a fault, if the power grid frequency is higher than **Grid reconnection frequency upper limit**, the inverter is not allowed to reconnect to the grid.
9	Grid reconnection frequency lower limit (Hz)	The standards of certain countries and regions require that after the inverter shuts down for protection due to a fault, if the power grid frequency is lower than **Grid reconnection frequency lower limit**, the inverter is not allowed to reconnect to the grid.
10	Reactive power compensation (cosϕ-P) trigger voltage (%)	Specifies the voltage threshold for triggering reactive power compensation based on the cosϕ-P curve.
11	Reactive power compensation (cosϕ-P) exit voltage (%)	Specifies the voltage threshold for exiting reactive power compensation based on the cosϕ-P curve.

7.1.5.2 Setting Protection Parameters

Procedure

Step 1 Choose **Function Menu** > **Settings** > **Protect Parameters** to go to the parameter setting screen.

 Copyright © Huawei Technologies Co., Ltd.

Figure 7-11 Protection parameters (special user)

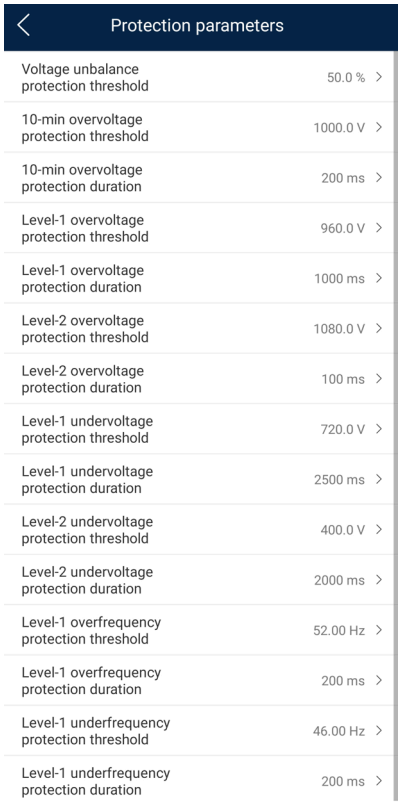

----End

Parameters

No.	Parameter	Description
1	Voltage unbalance protection threshold (%)	Specifies the inverter protection threshold when the power grid voltage is unbalanced.
2	10-min overvoltage protection threshold (V)	Specifies the 10-minute overvoltage protection threshold.
3	10-min overvoltage protection duration (ms)	Specifies the 10-minute overvoltage protection duration.
4	Level-N overvoltage protection threshold (V)	Specifies the level-N grid overvoltage protection threshold.
5	Level-N overvoltage protection duration (ms)	Specifies the level-N grid overvoltage protection duration.
6	Level-N undervoltage protection threshold (V)	Specifies the level-N grid undervoltage protection threshold.
7	Level-N undervoltage protection duration (ms)	Specifies the level-N grid undervoltage protection duration.
8	Level-N overfrequency protection threshold (Hz)	Specifies the level-N grid overfrequency protection threshold.

 Copyright © Huawei Technologies Co., Ltd.

No.	Parameter	Description
9	Level-N overfrequency protection duration (ms)	Specifies the level-N grid overfrequency protection duration.
10	Level-N underfrequency protection threshold (Hz)	Specifies the level-N grid underfrequency protection threshold.
11	Level-N underfrequency protection duration (ms)	Specifies the level-N grid underfrequency protection duration.

7.1.5.3 Setting Feature Parameters

Procedure

Step 1 Choose **Function Menu** > **Settings** > **Feature Parameters** to access the settings screen.

 Copyright © Huawei Technologies Co., Ltd.

Figure 7-12 Feature parameters (special user)

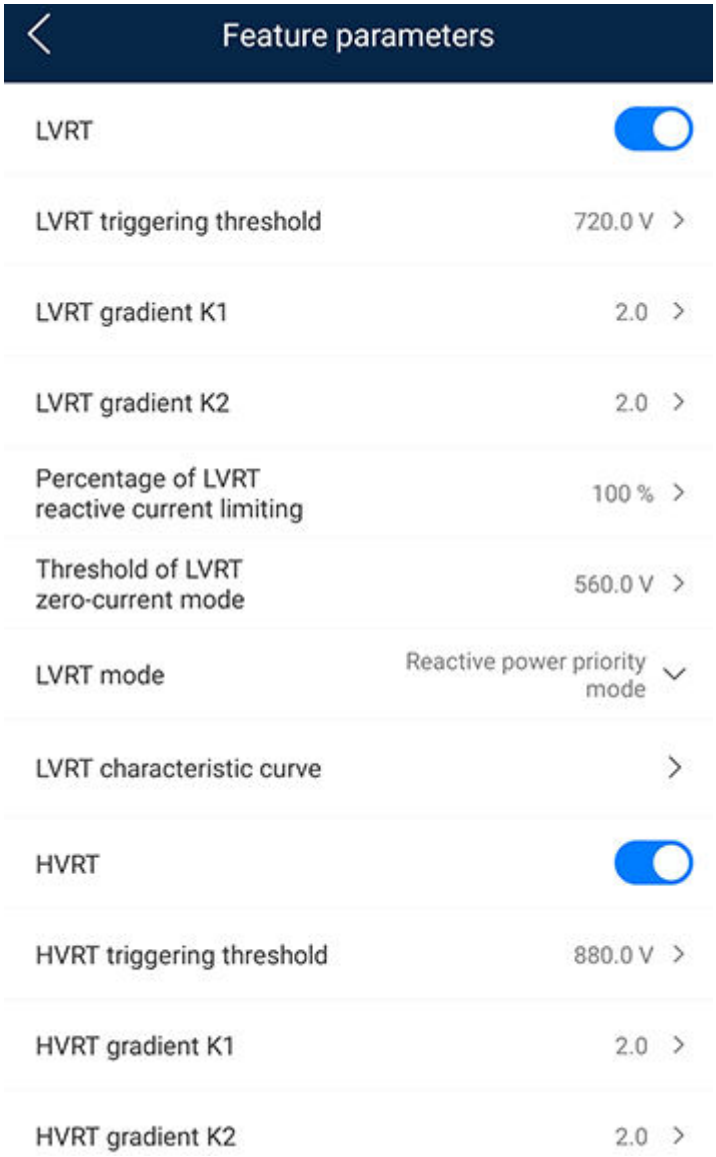

----End

Parameters

No.	Parameter	Description	Remarks
1	LVRT	LVRT is short for low voltage ride-through. When the grid voltage is abnormally low for a short time, the inverter cannot disconnect from the power grid immediately and has to work for some time.	-
2	Threshold for triggering LVRT (V)	Specifies the threshold for triggering LVRT. The threshold settings should meet the local grid standard.	This parameter is displayed when **LVRT** is set to **Enable**.

No.	Parameter	Description	Remarks
3	LVRT gradient K1	During LVRT, the solar inverter needs to generate positive-sequence reactive power to support the power grid. This parameter is used to set the positive-sequence reactive power generated by the solar inverter. For example, if you set **LVRT gradient K1** to **2**, the increment of positive-sequence reactive current generated by the solar inverter is 20% of the rated current when the AC voltage decreases by 10% during LVRT.	
4	LVRT gradient K2	During LVRT, the solar inverter needs to generate negative-sequence reactive power to support the power grid. This parameter is used to set the negative-sequence reactive power generated by the solar inverter. For example, if you set **LVRT gradient K2** to **2**, the increment of negative-sequence reactive current generated by the solar inverter is 20% of the rated current when the AC voltage decreases by 10% during LVRT.	
5	Percentage of LVRT reactive current limiting	During LVRT, the solar inverter needs to limit the reactive current. For example, if you set **Percentage of LVRT reactive current limiting** to **50**, the reactive current upper limit of the solar inverter is 50% of the rated current during LVRT.	
6	Threshold of LVRT zero-current mode	When **Zero current due to power grid fault** is enabled, if the power grid voltage is less than the value of **Threshold of LVRT zero-current mode** during LVRT, the zero current mode is used. Otherwise, the mode configured in **LVRT mode** is used.	
7	LVRT mode	Sets LVRT mode. The options are **Zero-current mode**, **Constant current mode**, **Reactive power priority mode**, and **Active power priority mode**.	
8	LVRT characteristic curve	Specifies the low voltage ride-through capability of the inverter.	
9	HVRT	HVRT is short for high voltage ride-through. When the grid voltage is abnormally high for a short time, the inverter cannot disconnect from the power grid immediately and has to work for some time.	-

 Copyright © Huawei Technologies Co., Ltd.

No.	Parameter	Description	Remarks
10	Threshold for triggering HVRT (V)	Specifies the threshold for triggering HVRT. The threshold settings should meet the local grid standard.	This parameter is displayed when **HVRT** is set to **Enable**.
11	HVRT gradient K1	During HVRT, the solar inverter needs to generate positive-sequence reactive power to support the power grid. This parameter is used to set the positive-sequence reactive power generated by the solar inverter. For example, if you set **HVRT gradient K1** to **2**, the increment of positive-sequence reactive current generated by the solar inverter is 20% of the rated current when the AC voltage increases by 10% during HVRT.	
12	HVRT gradient K2	During HVRT, the solar inverter needs to generate negative-sequence reactive power to support the power grid. This parameter is used to set the negative-sequence reactive power generated by the solar inverter. For example, if you set **HVRT gradient K2** to **2**, the increment of negative-sequence reactive current generated by the solar inverter is 20% of the rated current when the AC voltage increases by 10% during HVRT.	
13	Grid voltage protection shield during VRT	Specifies whether to shield the undervoltage protection function during LVRT or HVRT.	This parameter is displayed when **LVRT** or **HVRT** is set to **Enable**.
14	VRT exit hysteresis threshold	Specifies the LVRT/HVRT recovery threshold.	• This parameter is displayed when **LVRT** or **HVRT** is set to **Enable**. • LVRT recovery threshold = Threshold for triggering LVRT + VRT exit hysteresis threshold • HVRT recovery threshold = Threshold for triggering HVRT - VRT exit hysteresis threshold

 Copyright © Huawei Technologies Co., Ltd.

No.	Parameter	Description	Remarks
15	Grid voltage jump triggering threshold (%)	Specifies the LVRT or HVRT threshold for triggering a transient voltage jump of a power grid. A transient voltage jump indicates that the inverter cannot immediately disconnect from the power grid when the power grid is abnormal due to transient changes.	-
16	Zero current due to power grid fault	Certain countries and regions have requirements on the output current during high/low voltage ride-through. In this case, set this parameter to **Enable**. After this parameter is set to **Enable**, the output current is less than 10% of the rated current during high/low voltage ride-through.	This parameter is displayed when **LVRT** or **HVRT** is set to **Enable**.
17	Active islanding protection	Specifies whether to enable the active islanding protection function.	-
18	Automatic OFF due to communication interrupted	The standards of certain countries and regions require that the inverter must shut down after the communication is interrupted for a certain time.	-
19	Automatic ON due to communication resumed	If this parameter is set to **Enable**, the inverter automatically starts after communication recovers. If this parameter is set to **Disable**, the inverter needs to be started manually after communication recovers.	-
20	Communication interruption duration (min)	Specifies the duration for determining communication interruption. Used for automatic shutdown for protection in case of communication interruption.	-
21	Soft start/ boot time (s)	Specifies the duration for the power to gradually increase when the inverter starts.	-
22	Soft start time after grid failure (s)	Specifies the time for the power to gradually increase when the inverter restarts after the power grid recovers.	-
23	TCP heartbeat interval (s)	Specifies the TCP link timeout period for the solar inverter to connect to the management system.	-
24	TCP frame length	Specifies the maximum length of the TCP frame sent by the northbound device to the solar inverter.	-

 Copyright © Huawei Technologies Co., Ltd.

No.	Parameter	Description	Remarks
25	Heartbeat period at application layer (min)	Specifies the timeout period for the solar inverter to connect to the management system.	-

7.1.5.4 Setting Power Adjustment Parameters

Procedure

Step 1 Choose **Function Menu** > **Settings** > **Power Adjustment** to go to the parameter setting screen.

Figure 7-13 Power adjustment parameters (special user)

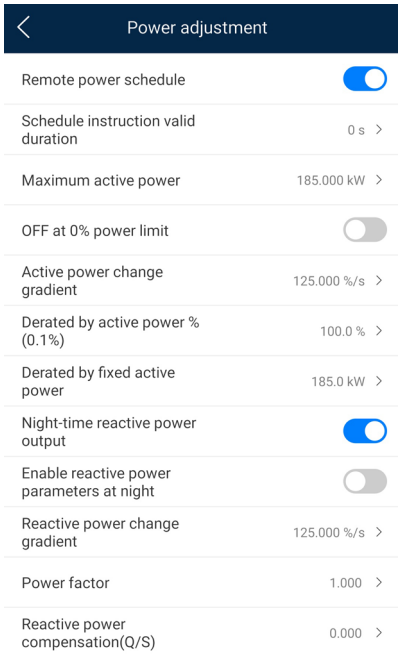

----End

Parameters

No.	Parameter	Description	Remarks
1	Remote power schedule	If this parameter is set to **Enable**, the inverter responds to the scheduling instruction from the remote port. If this parameter is set to **Disable**, the inverter does not respond to the scheduling instruction from the remote port.	-

No.	Parameter	Description	Remarks
2	Schedule instruction valid duration (s)	Specifies the time for maintaining the scheduling instruction.	When this parameter is set to 0, the scheduling instruction takes effect permanently.
3	Maximum active power (kW)	Specifies the output upper threshold for the maximum active power to adapt to different market requirements.	-
4	OFF at 0% power limit	If this parameter is set to **Enable**, the inverter shuts down after receiving the 0% power limit command. If this parameter is set to **Disable**, the inverter does not shut down after receiving the 0% power limit command.	-
5	Active power change gradient (%/s)	Specifies the change speed of the inverter active power.	-
6	Derated by fixed active power (kW)	Adjusts the active power output of the inverter by fixed value.	-
7	Derated by active power % (%)	Adjusts the active power output of the inverter by percentage.	If this parameter is set to **100**, the inverter outputs based on the maximum output power.
8	Night-time reactive power output	In some specific application scenarios, a power grid company requires that the inverter can perform reactive power compensation at night to ensure that the power factor of the local power grid meets requirements.	-
9	Enable reactive power parameters at night	When this parameter is set to **Enable**, the inverter outputs reactive power based on the setting of **Reactive power compensation at night**. Otherwise, the inverter executes the remote scheduling command.	This parameter is displayed when **Night-time reactive power output** is set to **Enable**.
10	Night-time reactive power compensation (kVar)	During the reactive power compensation at night, the reactive power is scheduled by fixed value.	This parameter is displayed when **Night-time reactive power output** and **Enable reactive power parameters at night** are set to **Enable**.

 Copyright © Huawei Technologies Co., Ltd.

No.	Parameter	Description	Remarks
11	Reactive power change gradient (%/s)	Specifies the change speed of the inverter reactive power.	-
12	Plant active power gradient (min/100%)	Specifies the rate of active power rise due to sunlight changes.	-
13	Average active power filtering time (ms)	Specifies the period of active power rise due to sunlight changes. This parameter is used with **Plant active power gradient**.	-
14	Power factor	Specifies the power factor of the inverter.	-
15	Reactive power compensation (Q/S)	Specifies the reactive power output by the inverter.	-
16	Overfrequency derating	If this parameter is set to **Enable**, the active power of the inverter will be derated according to a certain slope when the grid frequency exceeds the frequency that triggers overfrequency derating.	-
17	Frequency for triggering overfrequency derating (Hz)	The standards of certain countries and regions require that the output active power of inverters be derated when the power grid frequency exceeds a certain value.	• This parameter is displayed when **Overfrequency derating** is set to **Enable**. • When setting this parameter, ensure that the following condition is met: **Frequency for exiting overfrequency derating** ≤ **Frequency for triggering overfrequency derating** < **Cutoff frequency of overfrequency derating**.
18	Frequency for exiting overfrequency derating (Hz)	Specifies the frequency threshold for exiting overfrequency derating.	
19	Cutoff frequency of overfrequency derating (Hz)	Specifies the frequency threshold for cutting off overfrequency derating.	
20	Cutoff power of overfrequency derating (%)	Specifies the power threshold for cutting off overfrequency derating.	
21	Power recovery gradient of overfrequency derating (%/min)	Specifies the recovery rate of the overfrequency derating power.	
22	PF (U) voltage detection filtering time (s)	Specifies the time for filtering the grid voltage in the PF-U curve.	-

 Copyright © Huawei Technologies Co., Ltd.

No.	Parameter	Description	Remarks
23	Apparent power baseline (kVA)	Adjust the apparent output baseline of the inverter.	-
24	Active power baseline (kW)	Adjusts the active output baseline of the inverter.	-
25	Power percentage for triggering Q-U scheduling	Specifies the reference apparent power, in percentage. When the actual apparent power of the inverter is greater than the value of this parameter, the Q-U characteristic curve scheduling function is enabled.	-
26	Q-U characteristic curve	The inverter adjusts Q/S (the ratio of the output reactive power to apparent power) in real time based on U/Un(%) (the ratio of the actual power grid voltage to the rated power grid voltage).	-
27	Q-P characteristic curve	The inverter adjusts Q/Pn (the ratio of the output reactive power to the rated active power) in real time based on P/Pn(%) (the ratio of the actual active power to the rated active power).	-
28	Cosϕ-P/Pn characteristic curve	The inverter adjusts the output power factor cosϕ in real time based on P/Pn(%).	-

7.2 Upgrading the Inverter

USB flash drives of SanDisk, Netac, and Kingston are recommended. Other brands may be incompatible.

NOTE

- Delete the script file immediately after use to reduce information disclosure risks.
- The file system of the USB flash drive must be FAT32.

Procedure

Step 1 Download the required software upgrade package from the technical support website.

Step 2 Decompress the upgrade package and copy all files to the root directory of the USB flash drive.

 Copyright © Huawei Technologies Co., Ltd.

NOTICE

Do not modify the content in the upgrade package because the files involve RSA signature verification. If you modify the content, the upgrade will fail.

Step 3 Connect the USB flash drive to the USB port. The system automatically identifies the USB flash drive and executes all commands specified in the boot script file. View the LED indicator to determine the operating status.

Table 7-1 LED indicator description

LED Indicator	Status	Meaning
	Green off	There is no operation with a USB flash drive.
	Blinking green slowly	There is an operation with a USB flash drive.
	Blinking green fast	An operation with a USB flash drive has failed.
	Steady green	An operation with a USB flash drive is successful.

Step 4 The system automatically restarts when the upgrade is completed. All LED indicators are off during the restart. After the restart, the indicator is blinking green slowly for 1 minute and then it becomes steady green, which indicates that the upgrade is successful.

----End

 Copyright © Huawei Technologies Co., Ltd.

8 Maintenance

DANGER

- Wear personal protective equipment and use dedicated insulated tools to avoid electric shocks or short circuits.

WARNING

- Before performing maintenance, power off the equipment, follow the instructions on the delayed discharge label, and wait for a period of time as specified to ensure that the equipment is not energized.

8.1 System Power-Off

Precautions

WARNING

- If two inverters share the same AC switch on the AC side, power off the two inverters.
- After the inverter powers off, the remaining electricity and heat may still cause electric shocks and body burns. Therefore, put on personal protective equipment (PPE) and begin servicing the inverter fifteen minutes after power-off.

Procedure

Step 1 Run a shutdown command on the SUN2000 app, SmartLogger, or network management system (NMS).

For details, see the user manual of the corresponding product.

 Copyright © Huawei Technologies Co., Ltd.

Step 2 Turn off the AC switch between the inverter and the power grid.

Step 3 Set the three DC switches to OFF.

----End

8.2 Power-Off for Troubleshooting

Context

To prevent personal injury and equipment damage, perform the following procedure to power off the solar inverter for troubleshooting or replacement.

CAUTION

- When a solar inverter is faulty, try to avoid standing in front of the solar inverter.
- If the LED1 indicator of the inverter is off, the switches are in the OFF position, do not operate the DC switches of the inverter. In this case, go to **Step 4**.
- Do not operate the DC switch on the solar inverter before you finish **Step 3** to **Step 5**.
- The DC switch can be automatically disconnected when an internal fault is detected in an inverter. Do not turn on the switch before the fault is cleared.
- If the AC switch between the solar inverter and the power grid has automatically disconnected, do not turn on the switch before the fault is rectified.
- Before power-off for troubleshooting, do not touch the energized components of the solar inverter. Otherwise, electric shocks or arcing may occur.

Procedure

Step 1 Wear proper personal protective equipment (PPE).

Step 2 If the solar inverter is not shut down due to a fault, send a shutdown command on the SUN2000 app, SmartLogger, or management system. If the solar inverter has shut down due to a fault, go to the next step.

Step 3 Turn off the AC switch between the solar inverter and the power grid.

Step 4 Measure the DC current of each PV input string using a clamp meter that is set to the DC position.

- If the current is less than or equal to 0.5 A, go to the next step.
- If the current is higher than 0.5 A, wait until the solar irradiance decreases and the PV string current decreases below 0.5 A at night, and then go to the next step.

Step 5 Open the maintenance compartment door, install a support bar, and use a multimeter to measure the voltage between the AC terminal block and the ground. Ensure that the AC side of the solar inverter is disconnected.

 Copyright © Huawei Technologies Co., Ltd.

Step 6 Turn off all DC switches of the inverter and ensure that all switches are set to OFF. If the DC switches of the inverter have been automatically turned off, go to the next step.

Figure 8-1 Power-off for maintenance

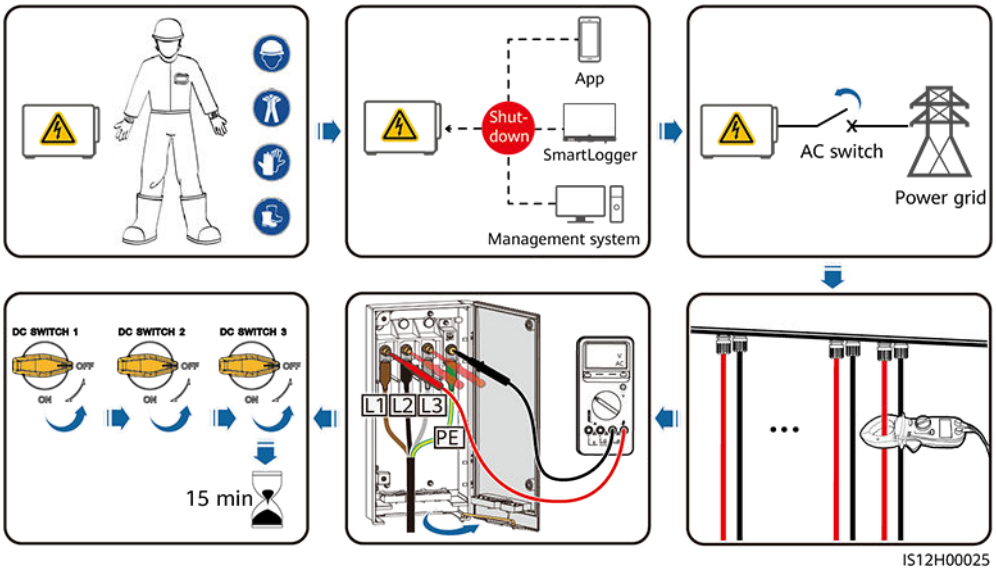

Step 7 Wait for 15 minutes and troubleshoot or repair the inverter.

WARNING

- Do not open the host panel for maintenance if the solar inverter is emitting odor or smoke, or has obvious exceptions.
- If the solar inverter does not emit odor or smoke and is intact, repair or restart it based on the alarm handling suggestions. Do not stand in front of the solar inverter during the restart.

----End

8.3 Routine Maintenance

Maintenance Item

To ensure that the inverter can operate properly for a long term, you are advised to perform routine maintenance on it as described in this chapter.

CAUTION

- Before cleaning the system, connecting cables, and maintaining the grounding reliability, power off the system and ensure that the three DC switches on the inverter are OFF.
- If you need to open the maintenance compartment door in rainy or snowy days, take protective measures to prevent rain or snow entering the maintenance compartment. If unavoidable, do not open the maintenance compartment door.

Maintenance list

Item	Check Method	Maintenance Interval
• Cleanness of air intake and exhaust vents • Fans	• Check whether there is dust on the air intake and exhaust vents. If necessary, remove the baffle of the air intake vent. • Check whether the fans produce abnormal sounds during operation.	Once every 6 to 12 months
System running status	• The inverter is not damaged or deformed. • The inverter operates with no abnormal sound. • When the inverter is running, check whether all inverter parameters are correctly set.	Once every 6 months
Electrical connections	• Cables are securely connected. • Cables are intact, and in particular, the parts touching the metallic surface are not scratched. • Check whether the sealing caps of idle DC input terminals fall off. • Check that the idle COM and USB ports are locked by waterproof caps.	The first inspection is 6 months after the initial commissioning. From then on, the interval can be 6 or 12 months.
Grounding reliability	Ground cables are securely connected.	The first inspection is 6 months after the initial commissioning. From then on, the interval can be 6 or 12 months.

 Copyright © Huawei Technologies Co., Ltd.

Item	Check Method	Maintenance Interval
Clear vegetation around the inverters	• Perform inspection and weeding as required. • Clean the site promptly after weeding.	Based on the local wilting season

Removing the baffle of the air intake vent

Figure 8-2 Removing the baffle

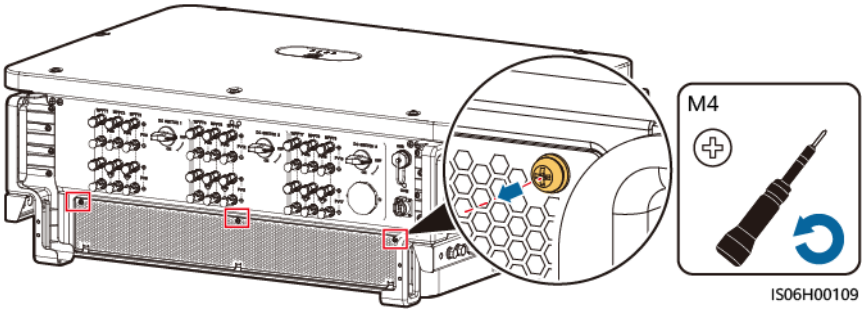

8.4 Replacing a Fan

CAUTION

- Before replacing a fan, power off the inverter.
- When replacing a fan, use insulation tools and wear personal protective devices.

NOTE

If the fan tray gets stuck when being pulled or pushed, slightly lift it.

Step 1 Remove the screw on the fan tray and save it. Pull out the fan tray until the fan baffle plate aligns with the inverter chassis.

Figure 8-3 Pulling out fan tray (1)

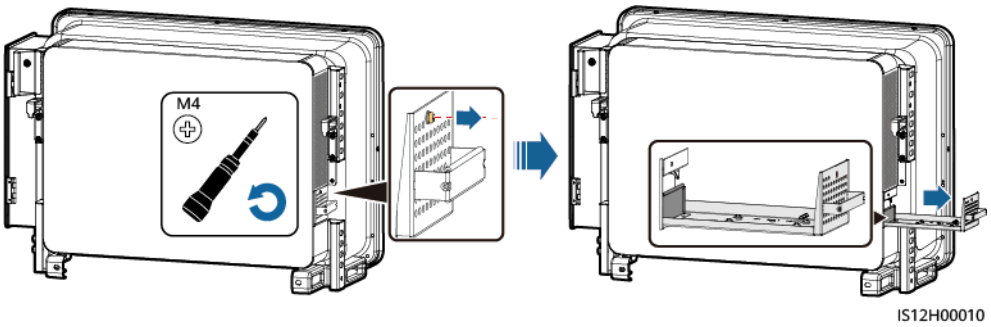

Step 2 Remove the cable ties shared by the cables, unscrew the connectors, and disconnect the cables.

Figure 8-4 Disconnecting cables

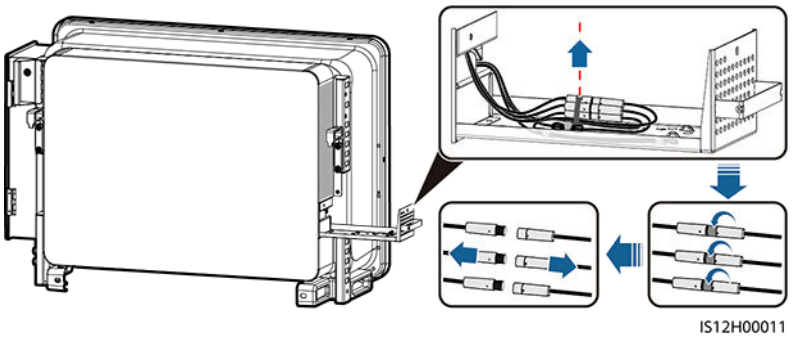

Step 3 Pull out the fan tray.

Figure 8-5 Pulling out fan tray (2)

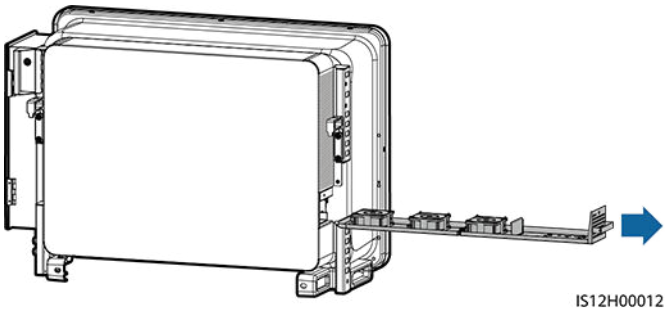

Step 4 Remove cable ties from the faulty fan.

- FAN 1 Faulty

Figure 8-6 Removing the FAN 1 cable ties

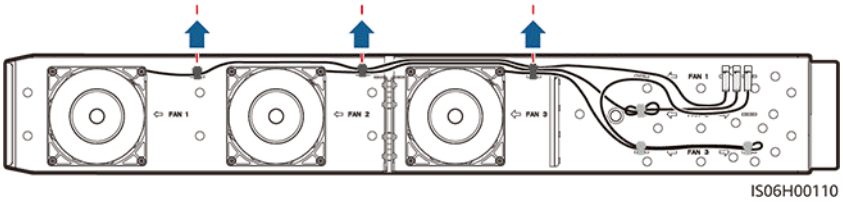

- FAN 2 Faulty

Figure 8-7 Removing the FAN 2 cable ties

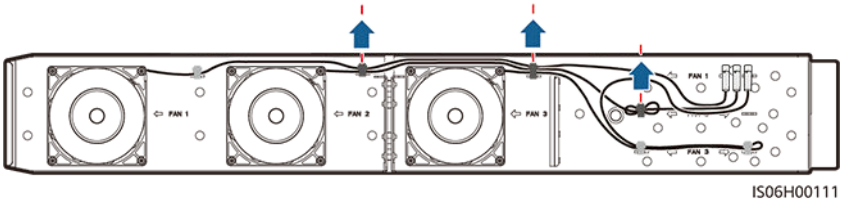

- FAN 3 Faulty

Figure 8-8 Removing the FAN 3 cable ties

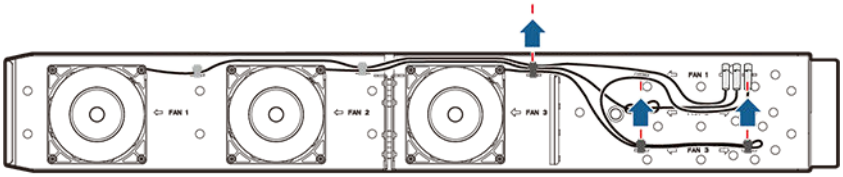

Step 5 Remove the faulty fan (FAN 1 is used as an example).

Figure 8-9 Removing the fan

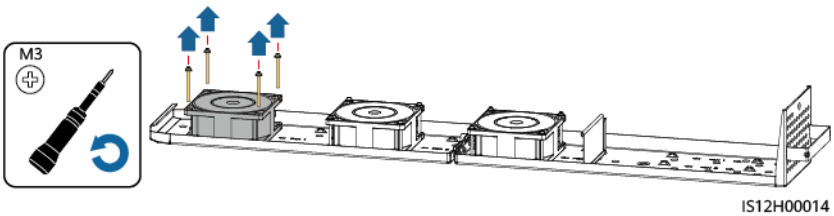

Step 6 Install the new fan (FAN 1 is used as an example).

Figure 8-10 Installing a new fan

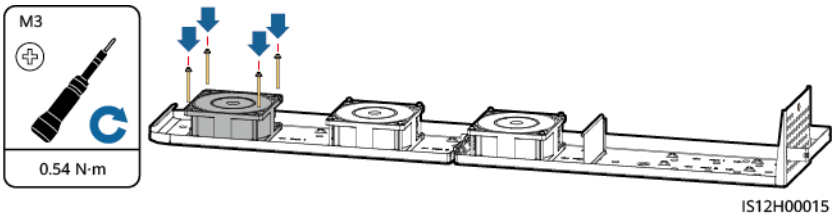

Step 7 Bind the fan cables.

- Binding positions for fan 1

Figure 8-11 Binding the FAN 1 cables

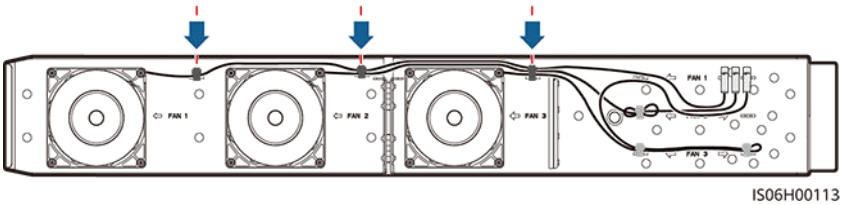

- Binding positions for fan 2

Figure 8-12 Binding the FAN 2 cables

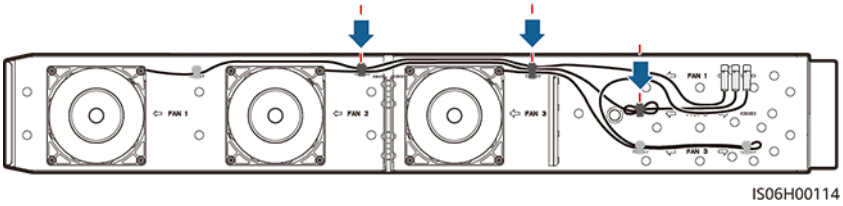

- Binding positions for fan 3

Figure 8-13 Binding the FAN 3 cables

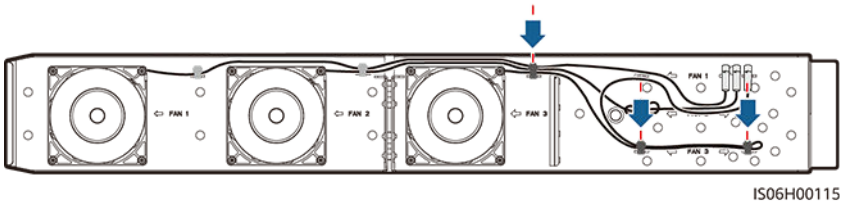

Step 8 Push the fan tray into the slot until the fan baffle plate aligns with the inverter chassis.

Figure 8-14 Pushing the fan tray in

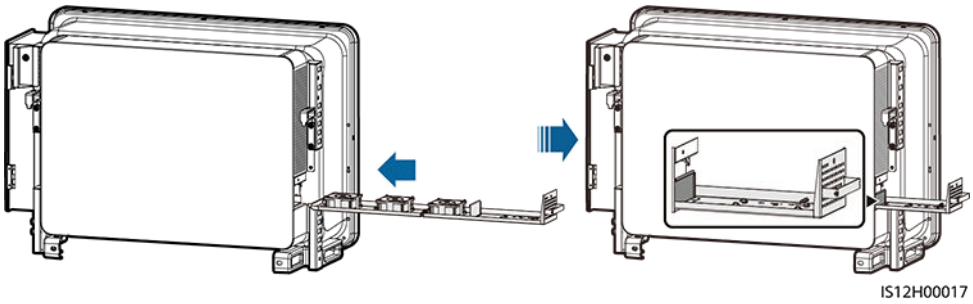

Step 9 Connect the cables correctly according to the cable labels and bind the cables.

Figure 8-15 Reconnecting and binding the cables

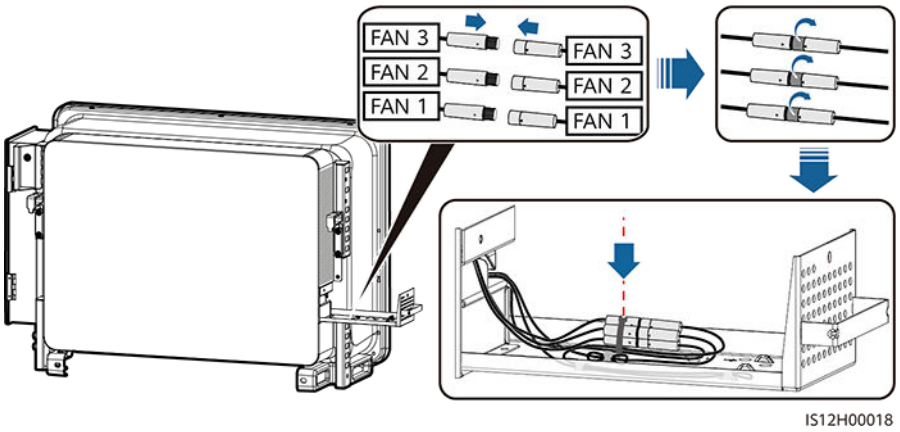

Step 10 Push the fan tray into the slot and tighten the screw.

Figure 8-16 Reinstalling the fan tray

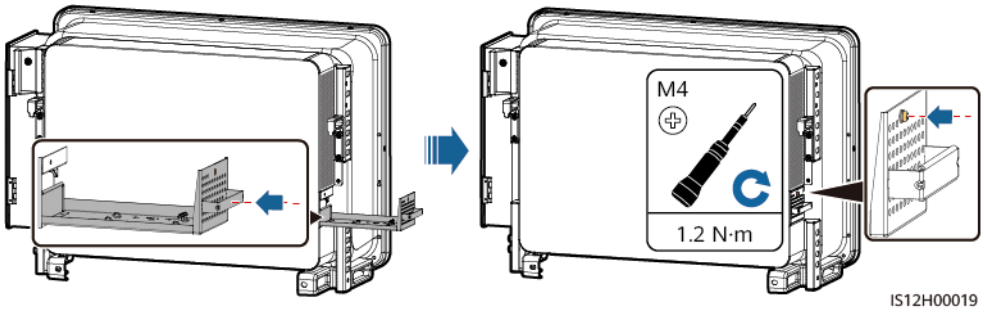

----End

8.5 Alarm Reference

For details about alarms, see the **Inverter Alarm Reference**.

8.6 Resetting and Turning On the DC Switch

Prerequisites

If internal inverter fault is displayed on the mobile app or remote monitoring system and the DC switch is OFF, the DC switch of the inverter has been automatically turned off. In this case, rectify the fault based on the alarm handling suggestions before turning on the DC switch.

Procedure

Step 1 Loosen the caps of the RESET buttons for the three DC switches, and press the RESET buttons inwards until you cannot go any further.

Step 2 Set the DC switches to **ON**.

Step 3 Tighten the caps of the RESET buttons.

Figure 8-17 Resetting and Turning On the DC Switch (DC SWITCH 1 is used as an example)

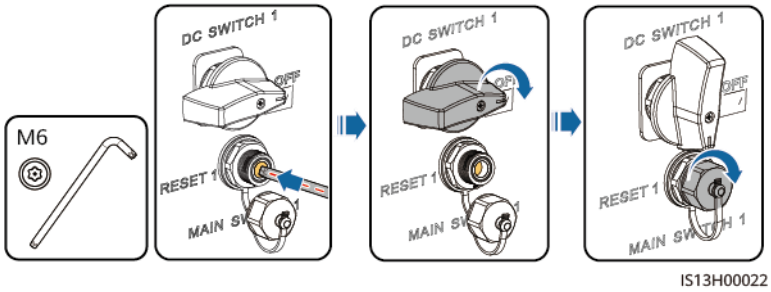

----End

8.7 Locating Insulation Resistance Faults

NOTICE

The inverter supports insulation resistance detection:

- If reactive power output at night is enabled for the inverter, log in to the SmartLogger WebUI, choose **Monitoring** > **Inverter** > **Running Param.** > **Power Adjustment** and set **Insulation resistance inspection during reactive power output at night** to **Enable**. Then, the inverter will perform insulation resistance detection once a day. (This parameter can be set only for SUN2000HA V300R001C00SPC145, SmartLogger V300R023C10SPC550, and later versions.)
- If reactive power output at night is disabled, the inverter performs insulation resistance detection by default when it is started.

If the ground resistance of a PV string connected to the SUN2000 is too low, the SUN2000 generates a **Low insulation resistance** alarm.

The possible causes are as follows:

- A short circuit occurs between the PV array and the ground.
- The ambient air of the PV array is damp and the insulation between the PV array and the ground is poor.

After the **Low insulation resistance** alarm is generated, the SUN2000 automatically triggers insulation resistance fault location. If the fault location is successful, the location information is displayed on the **Alarm details** screen of the **Low insulation resistance** alarm on the FusionSolar app.

Log in to the FusionSolar app, choose **Alarm** > **Active alarm**, and choose **Low insulation resistance** to enter the **Alarm details** screen.

NOTE

- The positive and negative terminals of a PV string are connected to the PV+ and PV– terminals of the inverter, respectively. The 0% position corresponds to the PV– terminal, and the 100% position corresponds to the PV+ terminal. Other percentages indicate that the fault occurs on a PV module or cable in the PV string.
- Possible fault position = Total number of PV modules in a PV string x Percentage of possible short-circuit positions. For example, if a PV string consists of 14 PV modules and the percentage of the possible short-circuit position is 34%, the possible fault position is 4.76 (14 x 34%), indicating that the fault is located near PV module 4, including the adjacent PV modules and their cables. The SUN2000 has a detection precision of ±1 PV module.
- The fault can be located only to the MPPT level. Perform the following steps to connect the PV strings corresponding to the faulty MPPT to the SUN2000 one by one to further locate and rectify the fault.
- When a non-short-circuit fault occurs, the possible short-circuit percentage is not displayed. If the insulation resistance is greater than 0.001 MΩ, the fault is not related to short circuit. Check all PV modules in the faulty PV string one by one to locate and rectify the fault.

 Copyright © Huawei Technologies Co., Ltd.

Figure 8-18 Definition of the percentage of the short-circuit position

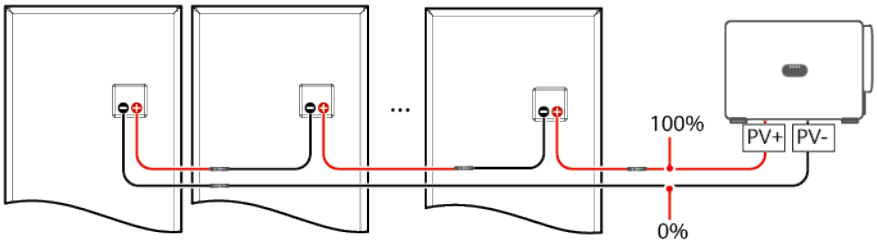

Procedure

NOTICE

If the irradiance or the PV string voltage is too high, the insulation resistance fault location may fail. In this case, the fault location status on the **Alarm details** screen is **Conditions not met**. Perform the following steps to connect PV strings to the SUN2000 one by one to locate the fault.

Step 1 Ensure that the AC connections are normal. Log in to the FusionSolar app, choose **Maintenance** > **Inverter ON/OFF** on the home screen, and send a shutdown command. Set the **DC SWITCH** of the SUN2000 to **OFF**.

Step 2 Connect a PV string to the SUN2000 and set the **DC SWITCH** to **ON**. If the SUN2000 status is **Shutdown: Command**, choose **Maintenance** > **Inverter ON/OFF** on the home screen and send a startup command.

Step 3 Choose **Alarm** on the home screen, enter the **Active alarm** screen, and check whether a **Low insulation resistance** alarm is reported.

- If no **Low insulation resistance** alarm is reported 1 minute after the DC side is powered on, choose **Maintenance** > **Inverter ON/OFF** on the home screen and send a shutdown command. Set the **DC SWITCH** to **OFF**. Go to **Step 2** and check the other PV strings one by one.
- If a **Low insulation resistance** alarm is reported 1 minute after the DC side is powered on, check the percentage of possible short-circuit positions on the **Alarm details** screen and calculate the location of the possibly faulty PV module based on the percentage. Then go to **Step 4**.

Step 4 Choose **Maintenance** > **Inverter ON/OFF** on the home screen and send a shutdown command. Set the **DC SWITCH** to **OFF**. Check whether the connectors or DC power cables between the possibly faulty PV modules and adjacent PV modules are damaged.

- If yes, replace the damaged connectors or DC power cables and then set the **DC SWITCH** to **ON**. If the SUN2000 status is **Shutdown: Command**, choose **Maintenance** > **Inverter ON/OFF** on the home screen and send a startup command. View alarm information.
  - If no **Low insulation resistance** alarm is reported 1 minute after the DC side is powered on, the insulation resistance fault location of the PV string is complete. Choose **Maintenance** > **Inverter ON/OFF** on the home screen and send a shutdown command. Set the **DC SWITCH** to **OFF**. Go to **Step 2** and check the other PV strings one by one. Then, go to **Step 7**.

 Copyright © Huawei Technologies Co., Ltd.

  - If the **Low insulation resistance** alarm is still reported 1 minute after the the DC side is powered on, choose **Maintenance** > **Inverter ON/OFF** on the home screen and send a shutdown command. Set the **DC SWITCH** to **OFF** and go to **Step 5**.
- If no, go to **Step 5**.

Step 5 Disconnect the possibly faulty PV module from the PV string, and use a DC extension cable with MC4 connectors to connect the adjacent PV modules. Set the **DC SWITCH** to **ON**. If the SUN2000 status is **Shutdown: Command**, choose **Maintenance** > **Inverter ON/OFF** on the home screen and send a startup command. View alarm information.

- If no **Low insulation resistance** alarm is reported 1 minute after the DC side is powered on, the fault occurred on the disconnected PV module. Choose **Maintenance** > **Inverter ON/OFF** on the home screen, send a shutdown command, and set the **DC SWITCH** to **OFF**. Go to **Step 7**.
- If the **Low insulation resistance** alarm is still reported 1 minute after the DC side is powered on, the fault did not occur on the disconnected PV module. Go to **Step 6**.

Step 6 Choose **Maintenance** > **Inverter ON/OFF** on the home screen and send a shutdown command. Set the **DC SWITCH** to **OFF**, reconnect the disconnected PV module, and repeat **Step 5** to check the adjacent PV modules at the possible fault position.

Step 7 Set the **DC SWITCH** to **ON**. If the SUN2000 status is **Shutdown: Command**, choose **Maintenance** > **Inverter ON/OFF** on the home screen and send a startup command.

----End

 Copyright © Huawei Technologies Co., Ltd.

9 Handling the Inverter

9.1 Removing the SUN2000

NOTICE

Before removing the SUN2000, disconnect both AC and DC connections.

Perform the following operations to remove the SUN2000:

1. Disconnect all cables from the SUN2000, including RS485 communications cables, DC input power cables, AC output power cables, and PGND cables.
2. Remove the SUN2000 from the mounting bracket.
3. Remove the mounting bracket.

9.2 Packing the SUN2000

- If the original packing materials are available, put the SUN2000 inside them and then seal them by using adhesive tape.
- If the original packing materials are not available, put the SUN2000 inside a suitable cardboard box and seal it properly.

9.3 Disposing of the SUN2000

If the SUN2000 service life expires, dispose of it according to the local disposal rules for electrical equipment waste.

 Copyright © Huawei Technologies Co., Ltd.

10 Technical Data

Efficiency

Technical Specifications	SUN2000-196KTL-H0	SUN2000-200KTL-H2	SUN2000-215KTL-H0
Maximum efficiency	≥ 99.0%	≥ 99.0%	≥ 99.0%
Chinese efficiency	≥ 98.4%	-	-
European efficiency	-	≥ 98.8%	≥ 98.8%

Input

Technical Specifications	SUN2000-196KTL-H0	SUN2000-200KTL-H2	SUN2000-215KTL-H0
Maximum input voltage	1500 V		
Maximum input current (per MPPT)	30 A		
Maximum short-circuit current (per MPPT)	50 A		
Maximum backfeed current to the PV array	0 A		
Lowest operating/startup voltage	500 V/550 V		

 Copyright © Huawei Technologies Co., Ltd.

Technical Specifications	SUN2000-196KTL-H0	SUN2000-200KTL-H2	SUN2000-215KTL-H0
MPP voltage range	500–1500 V		
Full-load MPPT voltage range	930–1300 V		
Rated input voltage	1080 V		
Number of inputs	18		
Number of MPP trackers	9		

Output

Technical Specifications	SUN2000-196KTL-H0	SUN2000-200KTL-H2	SUN2000-215KTL-H0
Rated active power	196 kW	185 kW	200 kW
Maximum apparent power	216 kVA	215 kVA	215 kVA
Maximum active power (cosϕ = 1)	216 kW	215 kW	215 kW
Rated output voltage	800 V AC, 3W+PE	800 V AC, 3W+PE	800 V AC, 3W+PE
Rated output current	141.5 A	133.6 A	144.4 A
Adapted power grid frequency	50 Hz	50 Hz/60 Hz	50 Hz/60 Hz
Maximum output current	155.9 A	155.2 A	155.2 A
Power factor	0.8 leading and 0.8 lagging	0.8 leading and 0.8 lagging	0.8 leading and 0.8 lagging
Maximum total harmonic distortion (rated power)	< 3%	< 3%	< 3%

 Copyright © Huawei Technologies Co., Ltd.

Protection

Technical Specifications	SUN2000-196KTL-H0	SUN2000-200KTL-H2	SUN2000-215KTL-H0
Input DC switch	Supported		
Anti-islanding protection	Supported		
Output overcurrent protection	Supported		
Input reverse connection protection	Supported		
PV string fault detection	Supported		
DC surge protection	Type II		
AC surge protection	Type II		
Insulation resistance detection	Supported		
Residue current monitoring (RCMU)	Supported		
Overvoltage category	PV II/AC III		

Display and Communication

Technical Specifications	SUN2000-196KTL-H0	SUN2000-200KTL-H2	SUN2000-215KTL-H0
Display	LED indicator, Bluetooth module+app, USB data cable+app, and WLAN module+app		
RS485	Supported		
MBUS	Supported		
USB	Supported		

 Copyright © Huawei Technologies Co., Ltd.

Common Parameters

Technical Specifications	SUN2000-196KTL-H0	SUN2000-200KTL-H2	SUN2000-215KTL-H0
Dimensions (W x H x D)	1035 mm x 700 mm x 365 mm		
Net weight	84 kg	≤ 86 kg	≤ 86 kg
Operating temperature	–25°C to +60°C		
Cooling mode	Smart air cooling		
Highest operating altitude	5000 m (derated when the altitude is greater than 4000 m)		
Humidity	0%–100% RH		
Input terminal	MC4 EVO2		
Output terminal	Waterproof terminal+OT/DT terminal		
IP rating	IP66		
Topology	Transformerless		

 Copyright © Huawei Technologies Co., Ltd.

A Securing Y-Branch Connectors

The DC input terminals of the solar inverter are prone to damage under stress. When Y-branch connectors are connected to the solar inverter, bind and secure the connectors to prevent the DC input terminals from bearing stress. You are advised to install a tray or beam to secure the Y-branch connectors.

Method 1: Using a Tray

Prepare a tray based on the base size of the solar inverter and the cabling of the Y-branch connectors.

- Material: outdoor corrosion-resistant material
- Bearing capacity: ≥ 10 kg

Figure A-1 Recommended dimensions

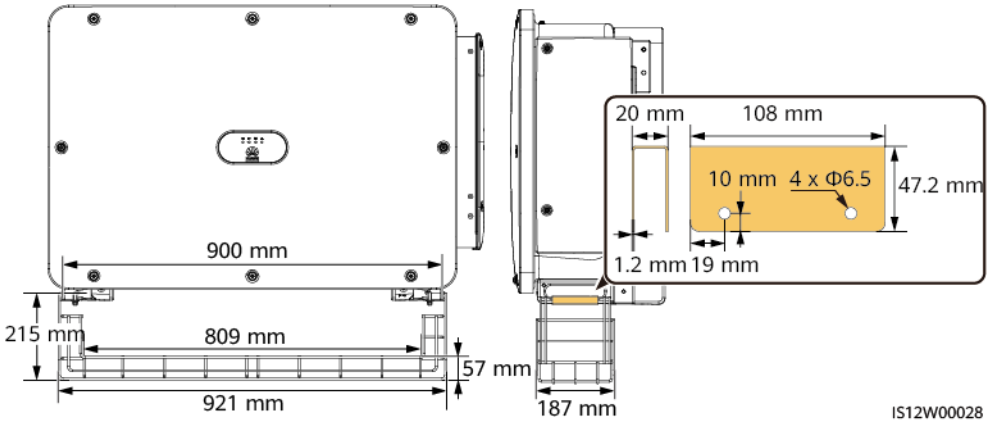

Step 1 Install a tray.

 Copyright © Huawei Technologies Co., Ltd.

Figure A-2 Installing a tray

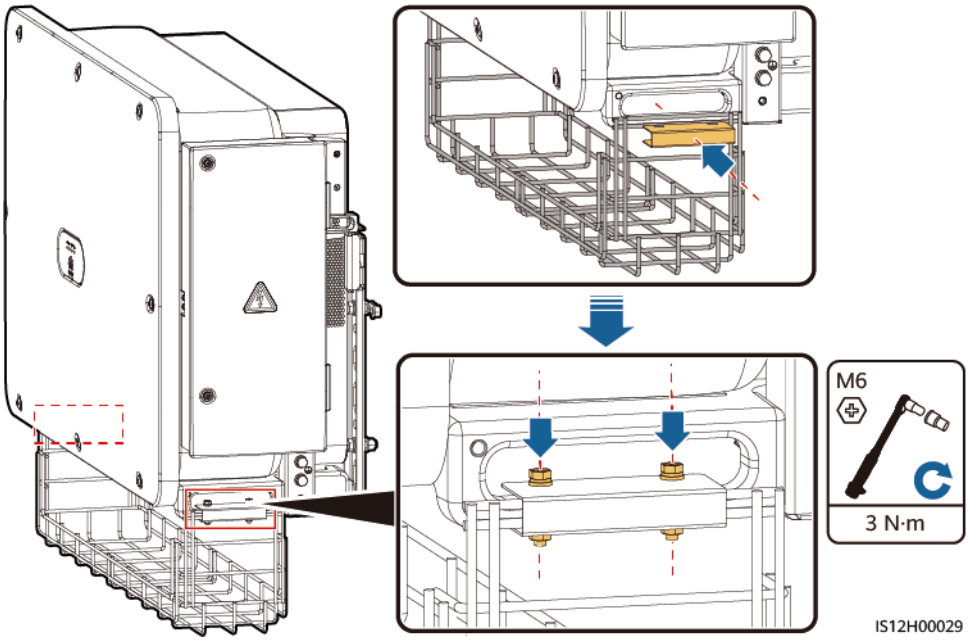

Step 2 Place the Y-branch connectors on the tray.

Figure A-3 Placing Y-branch connectors

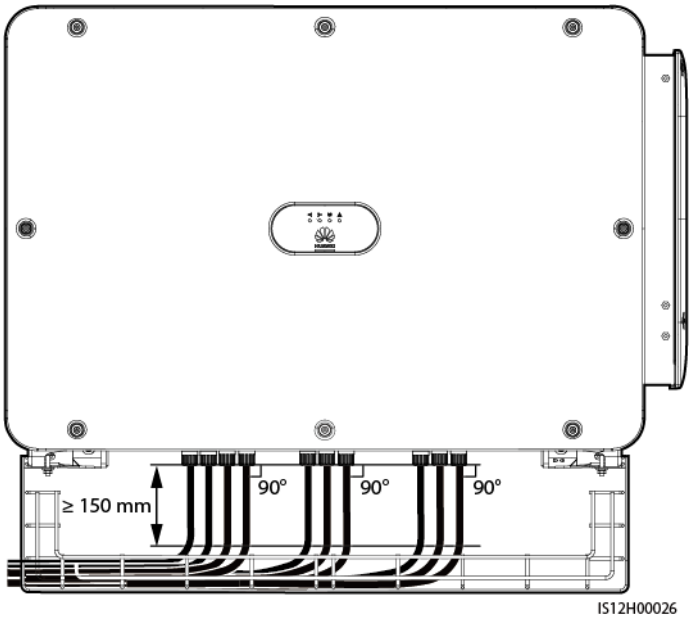

----End

Method 2: Using a Beam

Prepare a beam based on the base size of the solar inverter and the cabling of the Y-branch connectors.

- Material: outdoor corrosion-resistant material
- Bearing capacity: ≥ 10 kg

 Copyright © Huawei Technologies Co., Ltd.

Figure A-4 Recommended dimensions

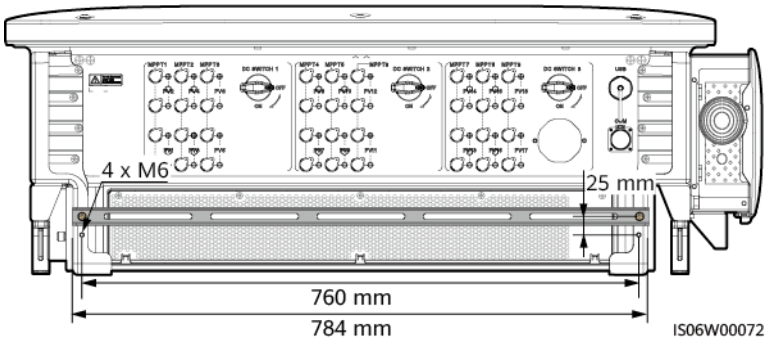

Step 1 Install a beam.

Figure A-5 Installing a beam

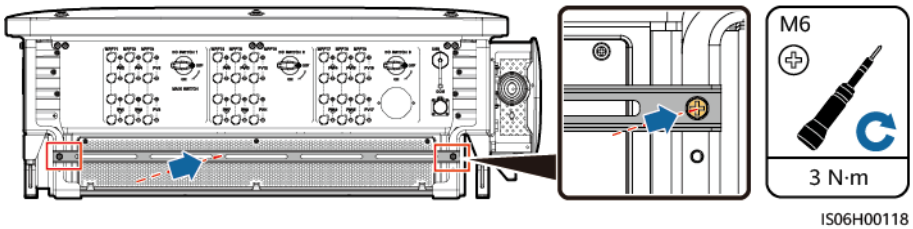

Step 2 Bind the Y-branch connectors on the beam.

Figure A-6 Binding Y-branch connectors

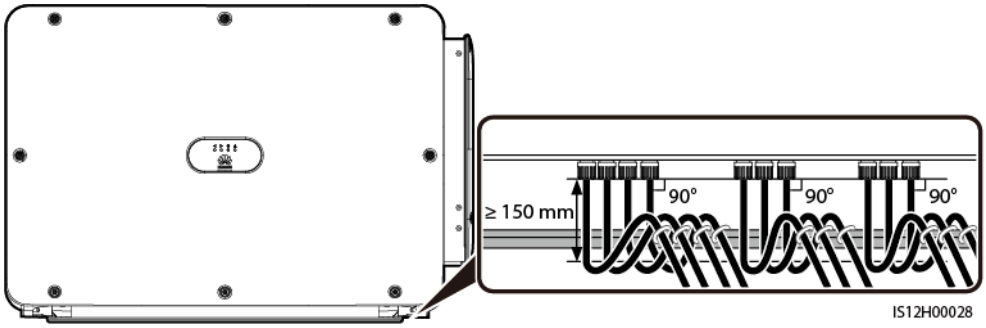

----End

Copyright © Huawei Technologies Co., Ltd.

B String Access Detection

Function Description

- Applies to large-scale commercial ground PV plants with PV strings facing the same direction.
- In AC or DC power limiting scenarios:
  - If the PV string access type is not identified, the value of **PV Status** will keep being displayed as **Not connected**. The PV string access type can be identified only when the inverters restore to the non-power limiting state and the current of all connected PV strings reaches the startup current.
  - If the PV string access type has been identified, when some PV strings connected to the 2-in-1 terminals are lost, no alarm will be generated. If some PV strings connected to the 2-in-1 terminals are restored, the access type cannot be identified. It can be determined whether all the 2-in-1 PV strings are restored only when the string current reaches **Startup current for 2 in 1 detection**.

Procedure

Step 1 Log in to the SUN2000 app as **Advanced User**. The initial password is **00000a**.

NOTE

Use the initial password upon first power-on and change it immediately after login. To ensure account security, change the password periodically and keep the new password in mind. Not changing the initial password may cause password disclosure. A password left unchanged for a long period of time may be stolen or cracked. If a password is lost, devices cannot be accessed. In these cases, the user is liable for any loss caused to the PV plant.

Step 2 Choose **Function Menu** > **Maintenance** > **String Access Detection** to go to the parameter setting screen.

 Copyright © Huawei Technologies Co., Ltd.

Figure B-1 String Access Detection

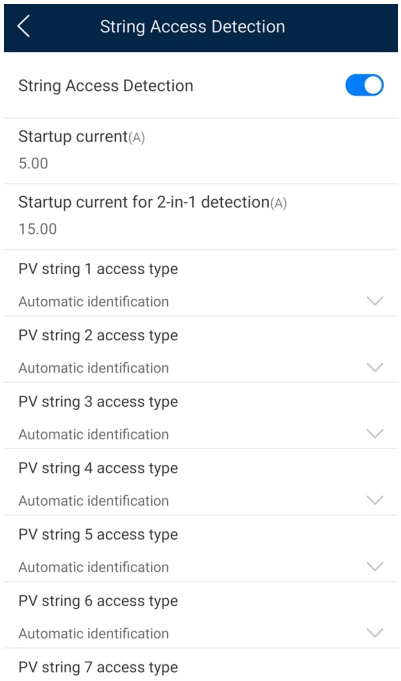

----End

Parameters

No.	Parameter	Description	Remarks
1	String Access Detection	The default value is **Disable**. After the inverter is connected to the power grid, you can set **String Access Detection** to **Enable**.	-
2	Startup current	When the current of all connected PV strings reaches the preset value, the PV string connection detection function is enabled. **NOTE** Startup current setting rules: • Startup current = I_{sc} (S_{tc}) × 0.6 (rounded up). For details about I_{sc} (S_{tc}), see the PV module nameplate. • Default startup current (5 A): applicable to the scenarios where the short-circuit current I_{sc} (S_{tc}) is greater than 8 A for the monocrystalline and polycrystalline PV modules.	This parameter is displayed only when **String Access Detection** is set to **Enable**.
3	Startup current for 2 in 1 detection	When the current of a PV string reaches **Startup current for 2 in 1 detection**, the PV string is automatically identified as **2 in 1**. You are advised to use the default value.	

Copyright © Huawei Technologies Co., Ltd.

No.	Parameter	Description	Remarks
4	PV string N access type **NOTE** *N* is the DC input terminal number of the inverter.	Set this parameter based on the type of the PV string connected to DC input terminal *N* of the inverter. Currently, the options are as follows: **Automatic identification** (default value), **Disconnection**, **Single PV string**, and **2 in 1**. You are advised to retain the default value. If the value is incorrectly set, the PV string access type may be incorrectly identified and alarms may be generated by mistake for the PV string connection status.	

 Copyright © Huawei Technologies Co., Ltd.

C Domain Name List of Management Systems

NOTE

The list is subject to change.

Table C-1 Domain names of management systems

Domain Name	Data Type	Scenario
intl.fusionsolar.huawei.com	Public IP address	FusionSolar SmartPVMS **NOTE** The domain name is compatible with cn.fusionsolar.huawei.com (Chinese mainland).

 Copyright © Huawei Technologies Co., Ltd.

D Grid Codes

No.	Grid Code	Description	SUN2000-196KTL-H0	SUN2000-200KTL-H2	SUN2000-215KTL-H0
1	CHINA_MV800	China medium-voltage power grid	Supported	-	-
2	G59-England-MV800	G59 medium-voltage power grid	-	-	Supported
3	AS4777-MV800	Australia medium-voltage power grid	-	-	Supported
4	INDIA-MV800	India medium-voltage power grid	-	Supported	-
5	IEC61727-MV800	IEC 61727 medium-voltage power grid (50 Hz)	-	Supported	Supported
6	ABNT NBR 16149-MV800	Brazil medium-voltage power grid	-	-	Supported
7	UTE C 15-712-1-MV800	France medium-voltage power grid	-	-	Supported
8	Chile-MV800	Chile medium-voltage power grid	-	-	Supported
9	Mexico-MV800	Mexico power grid	-	-	Supported
10	EN50438-TR-MV800	Türkiye medium-voltage power grid	-	-	Supported
11	TAI-PEA-MV800	Thailand PEA medium-voltage power grid	-	-	Supported
12	Philippines-MV800	Philippines medium-voltage power grid	-	-	Supported

 Copyright © Huawei Technologies Co., Ltd.

No.	Grid Code	Description	SUN2000-196KTL-H0	SUN2000-200KTL-H2	SUN2000-215KTL-H0
13	Malaysian-MV800	Malaysia medium-voltage power grid	-	-	Supported
14	NRS-097-2-1-MV800	South Africa medium-voltage power grid	-	Supported	-
15	SA_RPPs-MV800	South Africa RPPs medium-voltage power grid	-	Supported	Supported
16	Jordan-Transmission-MV800	Jordan power transmission network medium-voltage power grid	-	Supported	-
17	Jordan-Distribution-MV800	Jordan power distribution network medium-voltage power grid	-	Supported	-
18	Egypt ETEC-MV800	Egypt medium-voltage power grid	-	Supported	-
19	DUBAI-MV800	Dubai medium-voltage power grid	-	Supported	-
20	SAUDI-MV800	Saudi Arabia medium-voltage power grid	-	Supported	-
21	EN50438_IE-MV800	Ireland medium-voltage power grid	-	-	Supported
22	EN50549-MV800	Ireland power grid	-	Supported	Supported
23	Northern Ireland-MV800	Northern Ireland medium-voltage power grid	-	-	Supported
24	CEI0-21-MV800	Italy medium-voltage power grid (CEI0-21)	-	-	Supported
25	IEC 61727-MV800-60HZ	General medium-voltage power grid	-	Supported	Supported
26	Pakistan-MV800	Pakistan medium-voltage power grid	-	Supported	-
27	BRASIL-ANEEL-MV800	Brazil medium-voltage power grid	-	-	Supported
28	Israel-MV800	Israel power grid	-	-	Supported
29	CEI0-16-MV800	Italy medium-voltage power grid	-	-	Supported

 Copyright © Huawei Technologies Co., Ltd.

No.	Grid Code	Description	SUN2000-196KTL-H0	SUN2000-200KTL-H2	SUN2000-215KTL-H0
30	ZAMBIA-MV800	Zambia medium-voltage power grid	-	Supported	-
31	KENYA_ETHIOPIA_MV800	Kenya low-voltage and Ethiopia medium-voltage power grid	-	Supported	-
32	NAMIBIA_MV800	Namibia medium-voltage power grid	-	Supported	-
33	Cameroon-MV800	Cameroon medium-voltage power grid	-	Supported	-
34	NIGERIA-MV800	Nigeria medium-voltage power grid	-	Supported	-
35	ABUDHABI-MV800	Abu Dhabi medium-voltage power grid	-	Supported	-
36	LEBANON-MV800	Lebanon medium-voltage power grid	-	Supported	-
37	ARGENTINA-MV800	Argentina medium-voltage power grid	-	-	Supported
38	Jordan-Transmission-HV800	Jordan high-voltage and medium-voltage power grid	-	Supported	-
39	TUNISIA-MV800	Tunisia medium-voltage power grid	-	Supported	-
40	AUSTRALIA-NER-MV800	Australia NER standard medium-voltage power grid	-	-	Supported
41	VDE-AR-N4120_HV800	VDE 4120 standard medium-voltage power grid	-	-	Supported
42	Nicaragua-MV800	Nicaragua medium-voltage power grid	-	-	Supported
43	Custom-MV800-50Hz	Reserved	-	Supported	Supported
44	RD1699/661-MV800	Spain medium-voltage power grid	-	-	Supported
45	PO12.3-MV800	Spain medium-voltage power grid	-	-	Supported
46	Vietnam-MV800	Vietnam medium-voltage power grid	-	-	Supported
47	CHILE-PMGD-MV800	Chile PMGD medium-voltage power grid (800 V)	-	-	Supported

 Copyright © Huawei Technologies Co., Ltd.

No.	Grid Code	Description	SUN2000-196KTL-H0	SUN2000-200KTL-H2	SUN2000-215KTL-H0
48	GHANA-MV800	Ghana medium-voltage power grid (800 V)	-	Supported	-
49	TAIPOWER-MV800	Taiwan Power medium-voltage power grid (800 V)	-	-	Supported
50	OMAN-MV800	Oman medium-voltage power grid	-	Supported	-
51	KUWAIT-MV800	Kuwait medium-voltage power grid	-	Supported	-
52	BANGLADESH-MV800	Bangladesh medium-voltage power grid	-	-	Supported
53	BAHRAIN-MV800	Bahrain medium-voltage power grid	-	Supported	-
54	KAZAKHSTAN-MV800	Kazakhstan medium-voltage power grid	-	-	Supported
55	Oman-PDO-MV800	Oman PDO medium-voltage power grid	-	Supported	-
56	TAI-MEA-MV800	Thailand medium-voltage power grid	-	-	Supported
57	C10/11-MV800	Belgium medium-voltage power grid	-	-	Supported
58	G99-TYPEB-HV-MV800	UK G99-TYPEB-HV medium-voltage power grid	-	-	Supported
59	G99-TYPEC-HV-MV800	UK G99-TYPEC-HV medium-voltage power grid	-	-	Supported
60	G99-TYPED-MV800	UK G99-TYPED medium-voltage power grid	-	-	Supported
61	CEA-MV800	India CEA power grid	-	Supported	-
62	VDE-AR-N4110-MV800	Germany medium-voltage power grid (800 V)	-	-	Supported
63	Panama-MV800	Panama medium-voltage power grid (800 V)	-	-	Supported
64	Macedonia-MV800	North Macedonia medium-voltage power grid (800 V)	-	-	Supported
65	SINGAPORE-MV800	Singapore medium-voltage power grid	-	-	Supported

 Copyright © Huawei Technologies Co., Ltd.

No.	Grid Code	Description	SUN2000-196KTL-H0	SUN2000-200KTL-H2	SUN2000-215KTL-H0
66	Cambodia-MV800	Cambodia medium-voltage power grid	-	-	Supported
67	GREG060-MV800	Colombia medium-voltage power grid	-	-	Supported
68	PERU-MV800	Peru medium-voltage power grid	-	-	Supported
69	PORTUGAL-MV800	Portugal medium-voltage power grid	-	-	Supported
70	NTS-MV800	Spain medium-voltage power grid	-	-	Supported
71	KOREA-MV800	South Korea medium-voltage power grid (800 V)	-	-	Supported
72	Israel-HV800	Israel high-voltage power grid (161 kV)	-	-	Supported
73	AUSTRIA-MV800	Austria medium-voltage power grid (type B)	-	-	Supported
74	AUSTRIA-HV800	Austria medium-voltage power grid (type D)	-	-	Supported
75	POLAND-EN50549-MV800	Poland medium-voltage power grid	-	-	Supported
76	IRELAND-EN50549-MV800	Ireland power grid	-	-	Supported
77	DENMARK-EN50549-MV800	Denmark power grid	-	-	Supported
78	FRANCE-RTE-MV800	France RTE power grid	-	-	Supported
79	UZBEKISTAN-MV800	Uzbekistan power grid	-	Supported	-
80	CZECH-EN50549-MV800	Czech Republic power grid	-	-	Supported
81	MAURITIUS-MV800	Mauritius power grid	-	Supported	-
82	SAUDI-MV800	Saudi Arabia power grid	-	Supported	-
83	CHINA-GBT19964-MV800	China GB/T 19964 standard power grid	Supported	-	-

 Copyright © Huawei Technologies Co., Ltd.

No.	Grid Code	Description	SUN2000-196KTL-H0	SUN2000-200KTL-H2	SUN2000-215KTL-H0
84	CHINA-GBT29319-MV800	China GB/T 29319 standard power grid	Supported	-	-

NOTE

The grid codes are subject to change. The listed codes are for reference only.

 Copyright © Huawei Technologies Co., Ltd.

E Resetting Password

Step 1 Check that the AC and DC sides of the inverter are both powered on, and indicators and are steady green or blinking slowly for more than 3 minutes.

Step 2 Turn off the AC switch, set the DC SWITCH at the bottom of the inverter to OFF, and wait until all LED indicators on the inverter panel turn off.

Step 3 Complete the following operations within 4 minutes:

1. Turn on the AC switch and wait for about 90s or until the inverter indicator blinks.
2. Turn off the AC switch and wait about 30s or until all LED indicators on the inverter panel turn off.
3. Turn on the AC switch and wait for about 90s or until the inverter indicator blinks.

Step 4 Log in to the app and reset the password within 10 minutes. (If no operation is performed within 10 minutes, all parameters of the inverter remain unchanged.)

----End

NOTICE

- SUN2000HA V300R001C00SPC133 and later versions support password reset.
- You are advised to reset the password in the morning or at night when the solar irradiance is low.

 Copyright © Huawei Technologies Co., Ltd.

F Contact Information

If you have any questions about this product, please contact us.

https://digitalpower.huawei.com

Path: **About Us** > **Contact Us** > **Service Hotlines**

To ensure faster and better services, we kindly request your assistance in providing the following information:

- Model
- Serial number (SN)
- Software version
- Alarm ID or name
- Brief description of the fault symptom

 Copyright © Huawei Technologies Co., Ltd.

NOTE

EU Representative Information: Huawei Technologies Hungary Kft.
Add.: HU-1133 Budapest, Váci út 116-118., 1. Building, 6. floor.
Email: hungary.reception@huawei.com

G Digital Power Customer Service

https://digitalpower.huawei.com/robotchat/

 Copyright © Huawei Technologies Co., Ltd.

H Acronyms and Abbreviations

C

CEC	California Energy Commission
CPV	Concentrated Photovoltaics technology

L

LED	light emitting diode

M

MBUS	monitoring bus
MPP	maximum power point
MPPT	maximum power point tracking

P

PID	potential induced degradation
PV	photovoltaic

 Copyright © Huawei Technologies Co., Ltd.

R

RCMU	residual current monitoring unit

W

WEEE	waste electrical and electronic equipment

 Copyright © Huawei Technologies Co., Ltd.